English

VIDEX
TECHNOLOGY FOR THE FUTURE

VX2300
DIGITAL SYSTEM
“2 Wire” Audio/Video Door Entry System

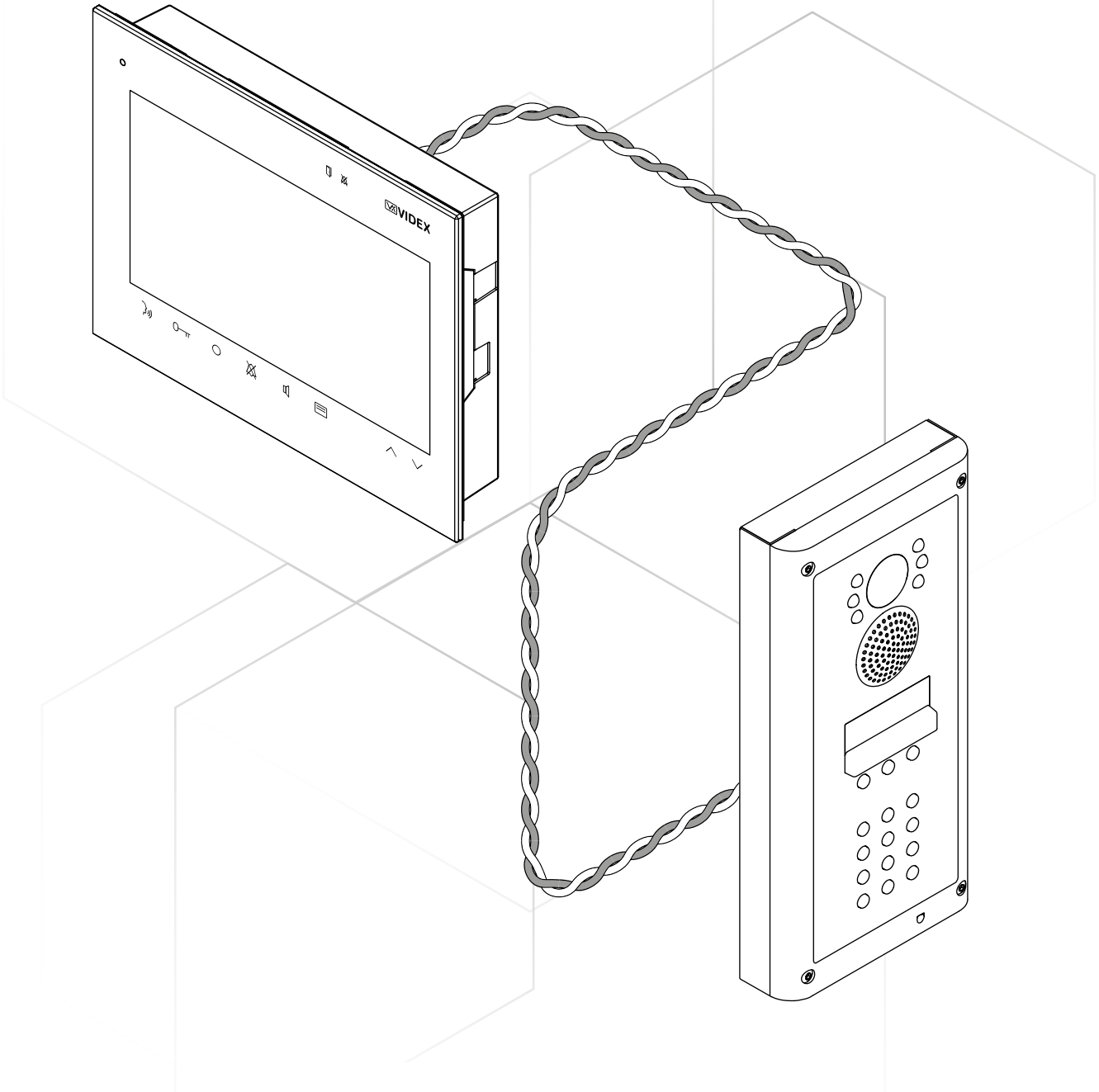

Installation handbook

67009600-EN
Edition 2015
Rev. 1.0

We recommend
This equipment is installed by a Competent Electrician, Security or Communications Engineer.

Index

Introduction **2**
Outdoor stations
Art. 4302N Digital call panel 3
Art. 4303N Speaker unit module with built-in functional to digital interface 6
Art. 4330N Camera module specific for VX2300 Digital System 10
4000 Series Surface and flush mounting door station installation 11
Intercoms
Art. 3181 Digital intercom for VX2300 2 Wire System 13
Art. 3183 Digital intercom for VX2300 2 Wire System 16
Art. 5188 Hands free intercom 18
5000 Series Hands free intercom wall mounting instructions 22
Videointercoms
Art. 3686 Digital videophone 23
3600 Series Videophone wall mounting instructions 27
Art. SL5488N Slim hands free videomonitor 28
5000 Series Videomonitor wall mounting instructions 32
Art. 6286 3.5" colour display videophone 33
6200 Series Videophone wall mounting instructions 37
Art. 6388 3.5" hands free colour display digital videophone 38
6300 Series Wall mounting instructions 42
Art. 6488 4.3" hands free colour display digital videophone 43
6400 Series Wall mounting instructions 47
Art. KRV88-KRV86 3.5" hands free videomonitor for VX2300 digital system 48
Kristallo Series 3.5" flush and surface videomonitor wall mounting instructions 54
Art. KRV782 7" Hands free videomonitor for VX2300 digital system 56
Kristallo Series 7" flush and surface videomonitor wall mounting instructions 60
Accessories
Art. 317N Active/passive four way distribution box 62
Art. 318 Two way passive distribution box 63
Art. 2315 BUS booster and video signal amplifier 64
Art. 2301N Entrances exchanger for VX2300 digital systems 65
Art. 2306N Block exchanger 66
Art. 2305 Extension Relay for VX2300 digital systems 68
Art. 2380 Interface "2 Wire" to "4+1" audio system 69
Art. 2321-2321/P Power supplies for VX2300 72
Art. 2322 Power supply converter from BUS line to 12 Vdc 73
General directions for installation **74**
Addresses table for dip-switch banks **76**
Installation diagrams **80**

Introduction

The VX2300 VIDEX Digital system is a complete video door entry system based on a two wire BUS.
The main features are the following:

- 2 wire bus (not polarity conscious);
- Up to 200 meters VIDEX specific cable or 100 meters using standard telephone cable;
- Up to 8 video outdoor stations (b&w or colour camera);
- Digital or functional front panels;
- Digital front panels with speech playback and PC programming facilities;
- Up to 100 extensions (maximum 100 units in total on the system, either intercoms, videointercoms or peripherals);
- Up to 4 devices on each extension (maintaining the maximum 100 units in total on the system);
- Intercommunication between devices on the same extension or between devices with different extension;
- Local door bell facility;
- Active floor divider (With floor isolation);
- Availability of relay modules for extra services directly connected to the bus;
- Electric lock powered by the outdoor station.

Art. 4302N Digital call panel

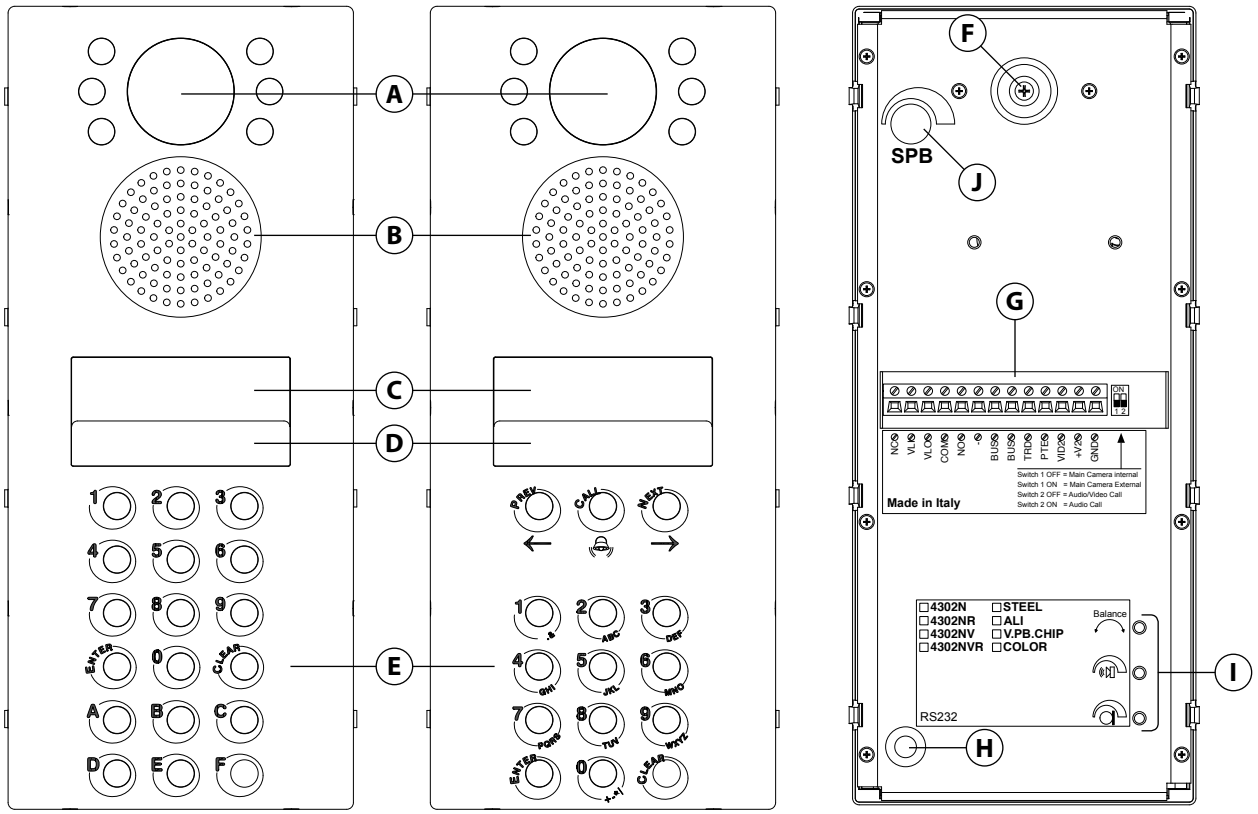

Fig. 1

DESCRIPTION

The digital call panel includes a B&W CCD camera (horizontal and vertical adjustment 10 degrees) with auto iris lens complete with LED's for illumination, a 2 x 16 character LCD display with back lighting, keypad illumination plus a keypad with 15 or 18 push buttons depending on the panel version. The panel with the repertory name has 15 buttons 3 of which for the repertory management, 10 numeric buttons (0..9) plus "ENTER & CLEAR". While the standard panel has 18 buttons, 10 numeric buttons (0..9) plus "ENTER & CLEAR" and 6 alphabetic buttons (A..F). Both version have speech board (with volume adjustment) facility which guides the visitor through verbal messages. The panel allows the connection of an external coax camera for which provide also the 12Vdc power supply (150mA max). You can set, between the panel built-in camera and the external, which is the main camera by the switch 1 of the two way dip-switch bank located near the connection terminals: the main camera is the one from which the video came on a call or camera recall, anyway the other camera can be switched by the proper videophone push button.
The panel is also available with colour camera (suffix "/color" to the product code). The camera illumination LEDs are infrared for B&W cameras and white light for colour cameras.

PANEL DETALIS:

- (A) Panel camera (colour or B&W) with illumination LEDs;
- (B) Panel loudspeaker;
- (C) Panel display;
- (D) Illumination LEDs for keypad;
- (E) Panel keypad;
- (F) Camera orientation adjustment;
- (G) Connection terminals and 2 way dip-switch (only switch 1 is used);
- (H) Serial RS-232 connector (for PC connection);
- (I) Balance, Loudspeaker volume and Microphone volume trimmers;
- (J) Speech board volume trimmer.

CONNECTION TERMINALS	
NC	Built-in relay "normally closed" contact - **Max 12-24 Vac/dc 3A**
VLI	Signal used for electric lock opening in "capacitor discharge" mode
VLO	
COM	Built-in relay "common" contact
NO	Built-in relay "normally open" contact - **Max 12-24 Vac/dc 3A**
–	Ground signal
BUS	Bus connection terminals
BUS	
TRD	Active low "Time Clock" signal. When active the "trade code" is enabled
PTE	Active low "Push to Exit" signal. When activated switches the built-in "door open" relay
VID2	Video signal input (Coax centre core)
+V2	12Vdc 150mA max output to supply the external camera if necessary
GND	Video signal ground (Coax screen and 0V to camera)

PROGRAMMING

The programming of the unit can be carried out from the panel keypad or a PC via RS-232 serial connection and the PC programming software. The programming step 6.3 is only available if the panel is programmed as "MAIN" (main door panel in a system with main entrance and secondary entrances using Art. 2306 exchangers). On systems with main and secondary entrances, panels at the main entrances must be set as "MAIN" while panels at the block entrances must be set as "STAND." (standard). The main door panels call all the apartments on the system so for each apartment the block address (Art. 2306 address) must be programmed in addition to the device address.

PROGRAMMING VIA PANEL KEYPAD

Prg. step	Display	Operation
1	ENTER FLAT NR. <- OR SEARCH ->	The panel is in stand-by. **Press "0" button.**
2	CODE:******	Type the ENGINEER's code (factory default six times "1") to access to the programming menù (the display will show a star for each digit typed). **Press "ENTER" button.**
3	CODE:****** NEW:	If required type a new ENGINEER's code (up to 6 digits). **Press "ENTER" button.**
4	TRADE C.:XXXX NEW:	Type the new TRADE CODE (up to 6 digits)[1] or leave unchanged (if existing). **Press "ENTER" button.**
5	0=STAND. 1=MAIN 0=NEW	Type 0 if the panel is used on system with 1 or more entrances on the same level or on secondary entrances on systems with main and secondary entrances. Type 1 if the panel is used as main entrance on a system with main entrances and secondary entrances. **Press "ENTER" button.**
6	MEM.LOCATION:	Type a memory location to program (1..998)[2] or nothing to jump to programming step 6. **Press "ENTER" button.**
6.1	FLAT:FFFFFF NEW:	Type the new "FLAT CODE" (up to 6 digits) or leave unchanged (if existing). The "FLAT CODE" is the number used by the visitor to call the flat by typing the number into the door panel keypad and pressing enter. **Press "ENTER" button.**
6.2	ID PHONE:III NEW:	Type the new "ID PHONE" (up to 3 digits)[3] or leave unchanged (if existing). The "ID PHONE" is the ID of the unit (intercom or videophone) located inside the flat. **Press "ENTER" button.**
6.3	ID BLOCK:BB NEW:	Type the new "ID BLOCK" (2 digit) or leave unchanged (if existing). The "ID BLOCK" is the ID of the block (set on the Art. 2306 relative to the block) to which the unit (intercom, videophone or relay) is connected. This setting is available only when main mode is set. **Press "ENTER" button.**
6.4	DOOR CODE:DDDDDD NEW:	Type the new "DOOR CODE" (up to 6 digits) or leave unchanged (if existing). The "DOOR CODE" is the code that allows the user to open the door from the outside by typing it in at the door panel keypad. (Pressing CODE followed by the code and then enter). **Press "ENTER" button.**
6.5	USER NAME: UUUUUUUUUUUUUUU	Type the new "USER NAME" (up to 16 characters) or leave unchanged (if existing). The "USER NAME" is the name shown when the visitor use the repertory name facility (only on Art. 4302R). **Press "ENTER", the programming goes back at the beginning of point 6.**
7	SPEECH TIME:SSS	Type the new "SPEECH TIME" (up to 3 digits in seconds) or leave unchanged (if existing). This is the duration of the conversation time. When the speech time expire the conversation is automatically closed. **Press "ENTER" button.**
8	DOOR TIME:DDD	Type the new "DOOR TIME" or leave unchanged (if existing). This is the duration of door open relay actuation. The relay will activate for the time specified by this value. **Press "ENTER" button.**
9	DEVICE N:N	Type the new "DEVICE NO" or leave unchanged (if existing). This is an unique identifier for the panel. It is used for camera recall operation (see videophone instructions). **Press "ENTER" button.**
10	1=ENG, 2=IT, 3=ESP 4=POR, 5=FR, 6=GER	The display shows the selected language by the relevant number underlined. Type the number relevant to the required language or leave it unchanged. **Press "ENTER" button.**
11	1=NO, 2=ST, 3=CMB SPEECH BOARD	The display shows the selected speech board operation mode[4] by the relevant number underlined. Leave unchanged or type the number relevant to the operating mode required. **Press "ENTER" button.**
12	TEST MODE: 1-2, ENTER=END	Choose the required test mode[5] to test or press "ENTER" to exit programming. **Press "ENTER" button.**

Notes

1 The trade code is the door opening code reserved to periodic visitors like postman, milkman etc. The trade code only works if the TRD input is shorted to ground.

2 Memory locations "0" and "999" are reserved to store respectively the "stand-by logo" and the "switched logo" that are two message of 16 characters each that are alternatively shown on the display when the unit is in stand-by mode. These messages may be customized to provide help to the visitors.

3 The ID PHONE is the binary address of the unit set on the 8 way dip-switch.

4 In mode one the speech board is disabled, in mode 2 the numbers are said digit by digit while in mode 3 the numbers are said as per pronunciation.

5 Each of the 2 test modes make a call to the intercoms/videophones stored in memory to check if it answers. In mode 1 the unit performs a quick test without switching on the intercoms/videophones and exits the test when the first error is encountered (the display shows the related error code (see table below). In mode 2 it makes the same tests as mode 1 but when an error is encountered it is signalled for 5 seconds with the error code then the test continues until all apartments are tested.

TEST MODE: ERROR CODES TABLE	
Code	**Message / Description**
1	Called User not available in the system: the device related to the user is not recognized in the system.
2	Called User is present but does not answer: the device related to the user is recognized in the system but does not answer.
3	Other transmissions recognized on the BUS: because of an intercommunicating conversation or a call from another door panel.
4	Called User in privacy mode: the intercom/videophone called is in "privacy" mode.
5	The end of conversation is not recognized: The intercom/videophone related to the user does not recognize the end of conversation.

TO SET MAIN CAMERA & AUDIO/VIDEO CALL	
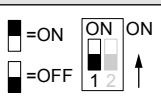	The main camera is the door panel built-in camera: during a call or a camera recall the video shown by the monitor is the video coming from the door panel built in camera. To switch to the external camera (if connected) operate the videophone proper button.
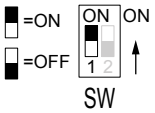	The main camera is the external camera: during a call or a camera recall the video shown by the monitor is the video coming from the external camera. To switch to the door panel built-in camera operate the videophone proper button.
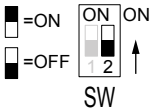	The call starts the video and the audio (default position for audio/video door panels).
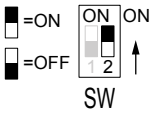	The call starts the audio only (when an audio panel is used in a video door entry system, this option avoid that a call from the audio panel switches on the monitor of the called videophone).

UNIT SPECIFICATION

Housing/Mounting: Size of two modules 4000 Series / 4000 Series Modular System
Push Buttons: 12 buttons Keypad
Programming: Yes, carried out through the panel keypad or via PC through serial RS-232 connection
Controls: Yes, balance trimmer plus microphone, loudspeaker volume trimmer
Interfaces: Yes, one serial RS-232 interface for pc connection
Memory: Yes, can be stored up to 250 users for a maximum of 100 flats
Power Supply: Supplied by the bus
Power consumption: Stand-by: 55mA
Operating: 155mA
Working Temperature: -10 +50 °C

Art. 4303N Speaker unit module with built-in functional to digital interface

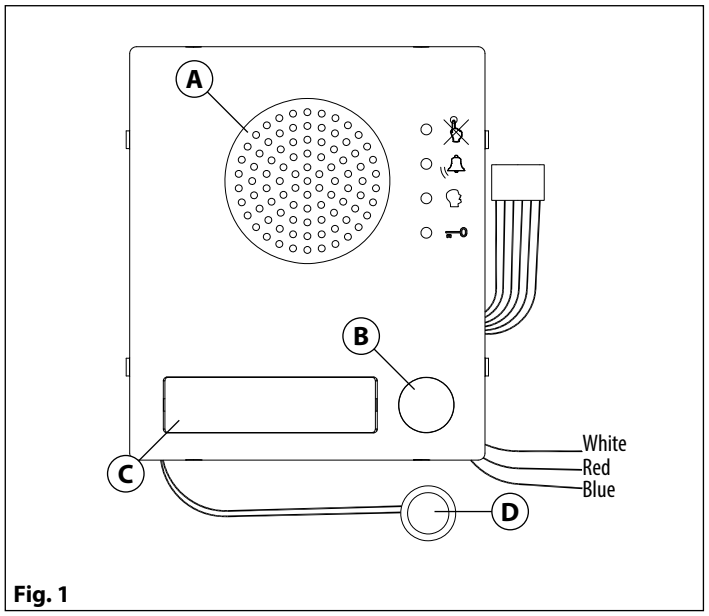

Fig. 1

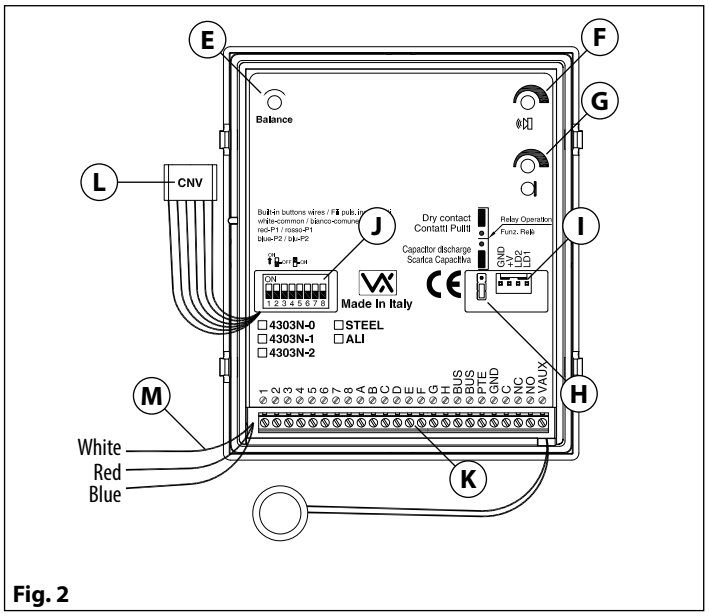

Fig. 2

DESCRIPTION

Functional speaker module for up to 64 traditional call buttons. The unit circuitry incorporates :

- The transmitting amplifier with condenser microphone and volume control;
- The receiving amplifier with volume control;
- The audio balance circuit with the "BALANCE" control;
- The enslavement relay to enable the electric lock (3 contacts: common, normally open and normally closed). It can also operate as capacitor discharge to power directly the electric lock;
- The call buttons from 0 to a maximum of 2 depending on the module version;
- The illumination LEDs for the card name holder.

The module is available in 3 versions according to the number of built-in push buttons.

MODULE DETALIS:

Ⓐ Loudspeaker;
Ⓑ Call push button (0 up to 2 according to the model);
Ⓒ Card name holder;
Ⓓ Microphone;
Ⓔ Balance control;
Ⓕ Loudspeaker volume Control;
Ⓖ Microphone volume control;
Ⓗ Door relay operating mode jumper:
- Lower position for capacitor discharge;
- Upper position for dry contacts;

Ⓘ Connector to supply button expansion modules:
- 3 modules can be connected between LD1 and GND;
- 3 modules can be connected between LD2 and GND;
- +V is 30V output with no current regulation to supply 3 button expansion modules connected in series;

Ⓙ Dip-switch to carry out the following programming:
- Door station ID (switches 1 to 3);
- Door opening time (switch 4);
- Conversation time (switch 5);
- Offset (switch 6);
- Camera selection order (switch 7);
- Art. 2306 block mode (switch 8);

Ⓚ System connection terminals;
Ⓛ CNV connector to link to Art. 4330N camera module;
Ⓜ Wires to configure built-in buttons:
- White = Common;
- Red = P1;
- Blue = P2

AVAILABLE MODULE VERSIONS

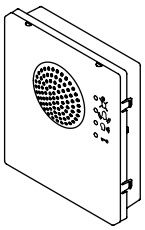

Art. 4303N-0

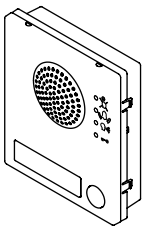

Art. 4303N-1

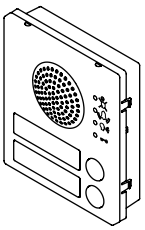

Art. 4303N-2

BUTTONS LAYOUT

As factory preset, built-in buttons are configured to call address 1 or 1 & 2 but the setup may be changed by altering the position of the 3 wires shown in **Fig. 2** with reference **"M"**.

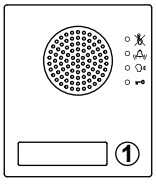

Art. 4303N-1

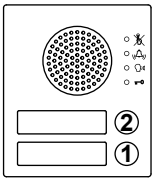

Art. 4303N-2

FRONT LEDS SIGNALLING DESCRIPTION	
	When illuminated, indicates that it is not possible to make a call because a call or a conversation is in progress (from the outdoor station from which you are calling or from another outdoor station on systems with multiple entrances). The LED will be off when the system is in stand-by
	If illuminated, indicates that the call from the outdoor station is in progress. The LED will switch OFF when the call is answered or after the programmed number of rings.
	If illuminated, indicates that it is possible to speak because the call has been answered. The LED will switch OFF at the end of a conversation (or at the end of the conversation time).
	If illuminated, indicates that the door lock has been released. It will switch OFF at the end of the programmed "door opening" time.

PROGRAMMING

The programming consists of the following settings:
- Unit ID (1..8);
- Door Opening Time (2 or 6 seconds);
- Conversation Time (1 or 2 minutes);
- Buttons Matrix start address (1 or 65);
- Default Camera (Art. 4330N or External);
- Door Open Relay operating mode (capacitor discharge or dry contacts).

First 5 settings are carried out through the first 7 switches of the 8 way dip-switch (reference **"J"** on **Fig. 2**) while the 6th setting is carried out through the jumper (reference **"H"** on **Fig. 2**) both accessible from the rear side of the module.

UNIT ID				
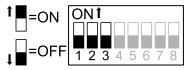				
Switches Position			8=OFF	8=ON
1	2	3	ID	ID
OFF	OFF	OFF	1	9
ON	OFF	OFF	2	10
OFF	ON	OFF	3	11
ON	ON	OFF	4	12
OFF	OFF	ON	5	13
ON	OFF	ON	6	14
OFF	ON	ON	7	15
ON	ON	ON	8	16

DOOR OPENING TIME	
Switches 4	Seconds
OFF	2
ON	6

CONVERSATION TIME	
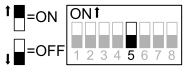	
Switches 5	Minutes
OFF	1
ON	2

MATRIX BUTTON START ADDRESS	
Switches 6	Start address
OFF	1
ON	65

MAIN CAMERA*	
Switches 7	Main camera
OFF	Art. 4330N
ON	External

DOOR OPEN RELAY OPERATING MODE	
Jumper position	Operating mode
Upper	Dry contacts
Lower	Discharge Capacitor**

* This setting, when the door station includes the camera module Art. 4330N and a second external camera, establishes which camera is the main camera from which the video signal will come from at the beginning of the call. The video signal can be switched to the secondary camera at any time by pressing the specific button on the videophone or videomonitor.

** When set as capacitor discharge, connect the electric lock between terminals "GND" and "NO".

SIGNALS ON SYSTEM CONNECTION TERMINALS				
1	Common terminal for addresses 1..8 (switch 6 = OFF) or 65..72 (switch 6 = ON)	**E**	Addresses 5,13,21,29,37,45,53, 61 (switch 6 = OFF) Addresses 69,77,85,93,101,109,117, 125 (switch 6 = ON)	
2	Common terminal for addresses 9..16 (switch 6 = OFF) or 73..80 (switch 6 = ON)	**F**	Addresses 6,14,22,30,38,46,54, 62 (switch 6 = OFF) Addresses 70,78,86,94,102,110,118, 126 (switch 6 = ON)	
3	Common terminal for addresses 17..24 (switch 6 = OFF) or 81..88 (switch 6 = ON)	**G**	Addresses 7,15,23,31,39,47,55, 63 (switch 6 = OFF) Addresses 71,79,87,95,103,111,119, 127 (switch 6 = ON)	
4	Common terminal for addresses 25..32 (switch 6 = OFF) or 89..96 (switch 6 = ON)	**H**	Addresses 8,16,24,32,40,48,56, 64 (switch 6 = OFF) Addresses 72,80,88,96,104,112,120, 128 (switch 6 = ON)	
5	Common terminal for addresses 33..40 (switch 6 = OFF) or 97..104 (switch 6 = ON)	**BUS**	BUS Connection terminals	
6	Common terminal for addresses 41..48 (switch 6 = OFF) or 105..112 (switch 6 = ON)	**BUS**		
7	Common terminal for addresses 49..56 (switch 6 = OFF) or 113..120 (switch 6 = ON)	**PTE**	Active low input push to exit signal	
8	Common terminal for addresses 57..64 (switch 6 = OFF) or 121..128 (switch 6 = ON)	**GND**	Ground	
A	Addresses 1,9,17,25,33,41,49, 57 (switch 6 = OFF) Addresses 65,73,81,89,97,105,113, 121 (switch 6 = ON)	**C**	Door open relay common contact	**Max 12-24 Vac/dc 3A**
B	Addresses 2,10,18,26,34,42,50, 58 (switch 6 = OFF) Addresses 66,74,82,90,98,106,114, 122 (switch 6 = ON)	**NC**	Door open relay normally closed contact	
C	Addresses 3,11,19,27,35,43,51, 59 (switch 6 = OFF) Addresses 67,75,83,91,99,107,115, 123 (switch 6 = ON)	**NO**	Door open relay normally open contact	
D	Addresses 4,12,20,28,36,44,52, 60 (switch 6 = OFF) Addresses 68,76,84,92,100,108,116, 124 (switch 6 = ON)	**VAUX**	35Vdc power supply input (if used, the module is powered locally and not from the BUS)	

BUTTON MATRIX

The button, when pressed, will generate a call to a specific address according to the terminals to which the button is connected: i.e. a button connected between terminals "2" and "B", when pressed will generate a call to the address 10 if the dip-switch 6= OFF or a call to the address 74 if the switch 6=ON.

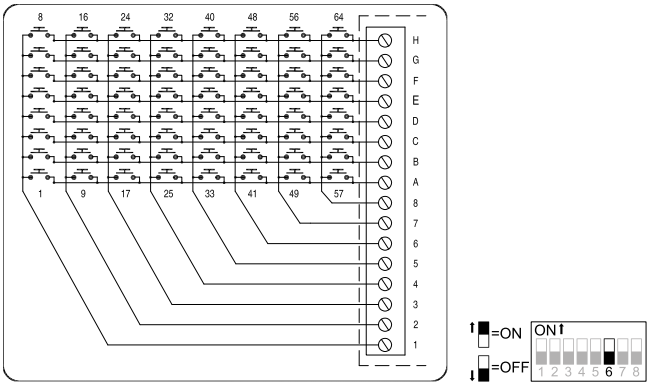

SW6 OFF	1	2	3	4	5	6	7	8
A	1	9	17	25	33	41	49	57
B	2	10	18	26	34	42	50	58
C	3	11	19	27	35	43	51	59
D	4	12	20	28	36	44	52	60
E	5	13	21	29	37	45	53	61
F	6	14	22	30	38	46	54	62
G	7	15	23	31	39	47	55	63
H	8	16	24	32	40	48	56	64

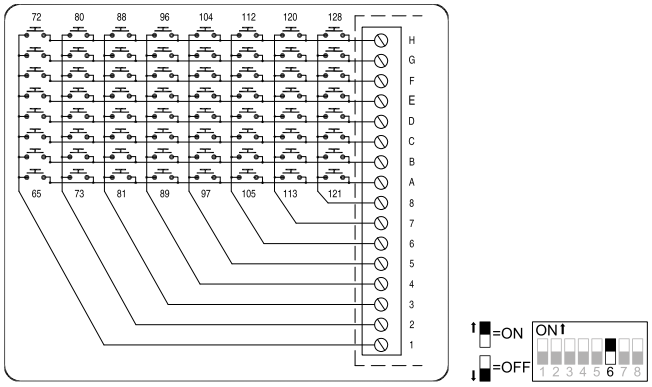

SW6 ON	1	2	3	4	5	6	7	8
A	65	73	81	89	97	105	113	121
B	66	74	82	90	98	106	114	122
C	67	75	83	91	99	107	115	123
D	68	76	84	92	100	108	116	124
E	69	77	85	93	101	109	117	125
F	70	78	86	94	102	110	118	126
G	71	79	87	95	103	111	119	127
H	72	80	88	96	104	112	120	128

UNIT SPECIFICATION

Housing/Mounting:	One 4000 Series Module / 4000 Series Modular System
Push Buttons:	Yes, from 0 to 2 call buttons according to the model
Programming:	Yes, carried out by the 8 way dip-switch located on the rear of the module
Controls:	Microphone and Loudspeaker volume trimmers plus balance trimmer
Front plate finishes:	Mirror stainless steel (standard), Anodized Aluminium (add /a after the product code) or High Brass (add /HB)
Power Supply:	Supplied by the BUS line
Power consumption:	Stand-by: 28mA Operating: 38mA
Working Temperature:	-10 +50 °C

Art. 4330N Camera module specific for VX2300 Digital System

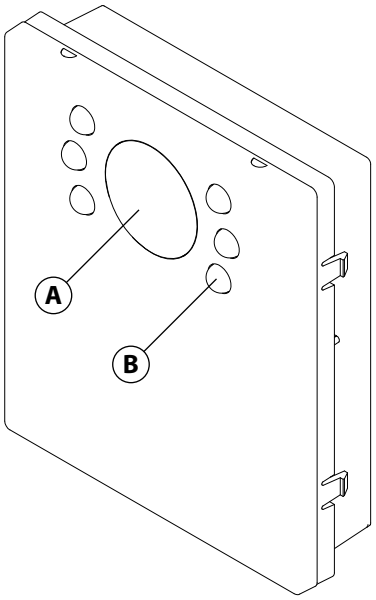

Fig. 1

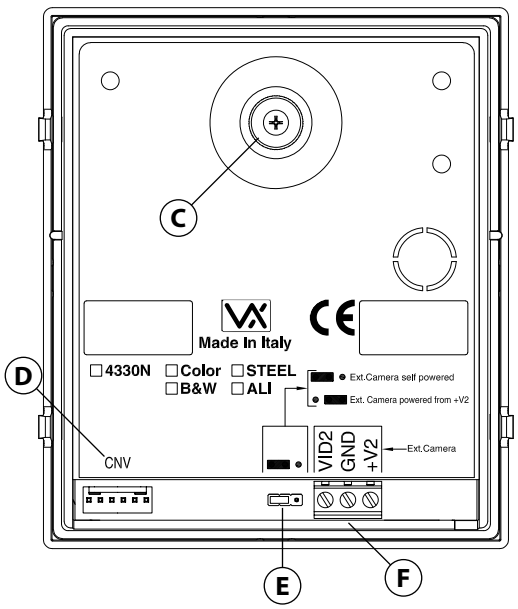

Fig. 2

DESCRIPTION

This module is equipped with a CCD camera with auto iris lens complete with LED's for illumination . The module is available in black and white or colour version (put **"/color"** after the product code). The illumination LED's are infrared for B&W cameras and white light for colour cameras. The camera has horizontal and vertical adjustment (10 degrees). The module has a coax video signal input for an external additional camera (switched from the videophone or video monitor) with a facility to power the external camera directly.

MODULE DETALIS:

- Ⓐ Camera window;
- Ⓑ Illumination LEDs (white light or infrared depending on camera type);
- Ⓒ Camera horizontal and vertical adjustment;
- Ⓓ CNV connector to link between the camera and the Art. 4303N using the supplied cable;
- Ⓔ External camera power supply setup jumper:
  - In left position (factory preset) the external camera is powered from an external power supply
  - In right position, the external camera is powered from the terminal +V2 (12Vdc) & GND
- Ⓕ External camera connections:
  - **VID2** Video signal input (Coax centre core);
  - **GND** Video signal ground (Coax screen and 0V to camera);
  - **+V2** 12Vdc 150mA max output to supply the external camera if necessary.

TECHNICAL SPECIFICATION

Housing/Mounting:	One 4000 Series Module / 4000 Series Modular System
Push Buttons:	N/A
Programming:	N/A
Controls:	Camera orientation adjustment
Front plate finishes:	Mirror stainless steel (standard), Anodized Aluminium (add /a after the product code) or High Brass (add /HB)
Power Supply:	Supplied by the relevant speaker unit module
Power consumption:	Stand-by: 30mA Operating: 126mA
Working Temperature:	-10 +50 °C

4000 Series Surface and flush mounting door station installation

EXAMPLE: INSTALLING A FOUR MODULE OUTDOOR STATION

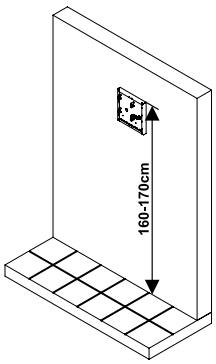

fig. 1

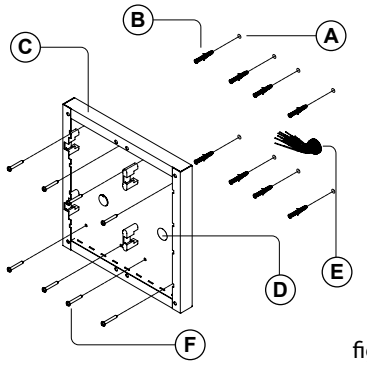

fig. 2

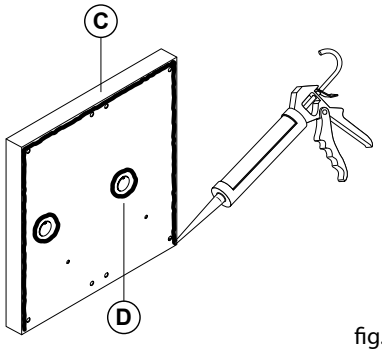

fig. 3

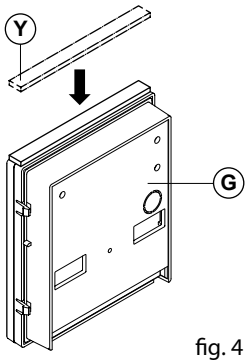

fig. 4

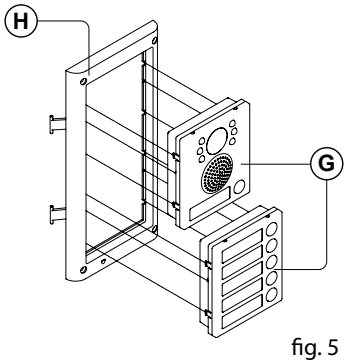

fig. 5

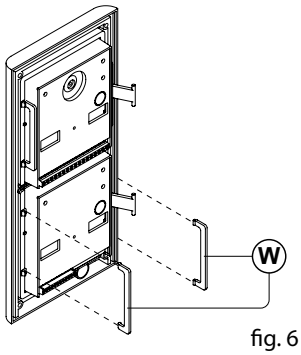

fig. 6

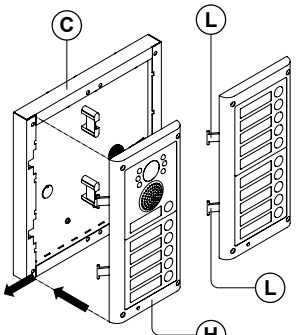

fig. 7

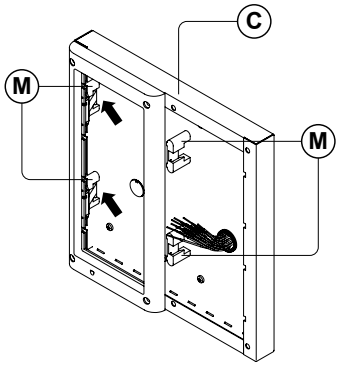

fig. 8

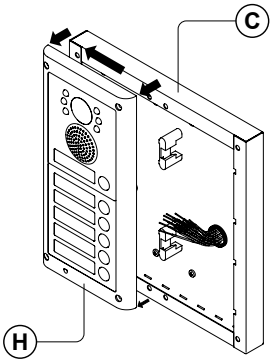

fig. 9

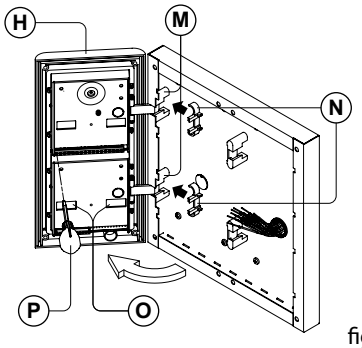

fig. 10

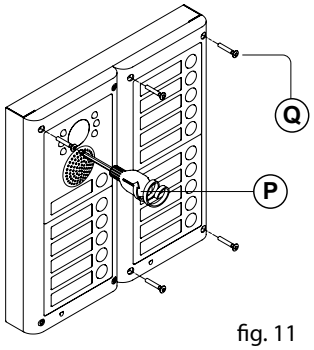

fig. 11

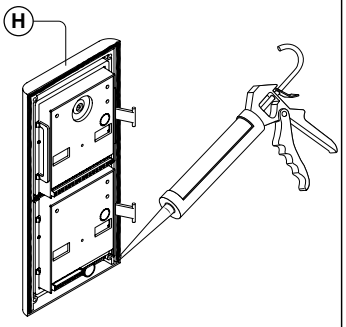

fig. 12

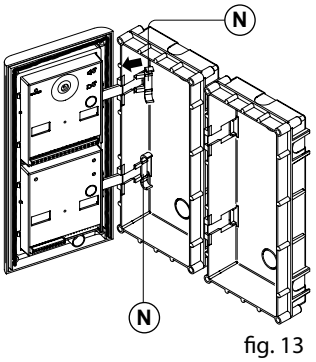

fig. 13

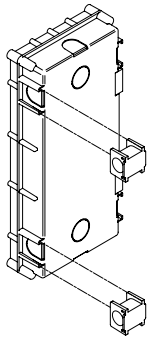

fig. 14

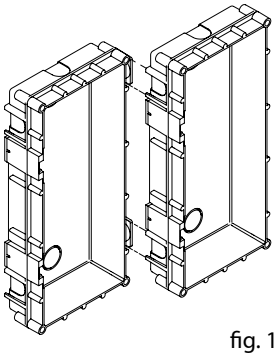

fig. 15

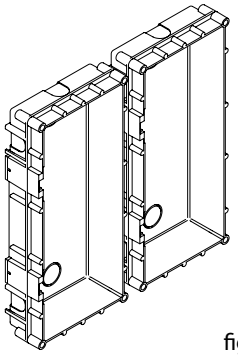

fig. 16

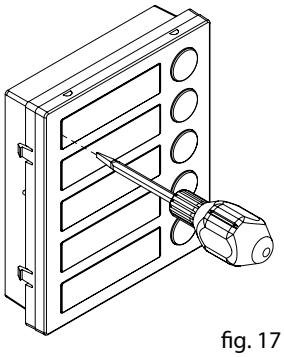

fig. 17

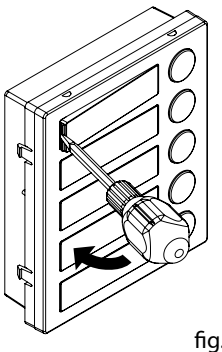

fig. 18

INSTALLING A SURFACE MOUNT DOOR STATION

1. Place the surface box against the wall (165-170cm between the top of the box and the floor level as shown in **Fig. 1**) and mark the fixing holes for the wall plugs and the hole for the cables **E (fig. 2).** Observe the orientation of the box with the hinge on the left;

> ⚠ **In order to prevent water ingress we highly recommend using a silicon sealant between the wall and the back box C (Fig.3) and around all holes D (Fig.3);**

2. As shown on **Fig. 2,** drill the fixing holes **A,** insert the wall plugs **B** and feed the cables **E** through the surface box opening **D**, fix surface box **C** to the wall using the screws **F**;
3. Apply the **Y** silicon sealant on top of each module as shown in **Fig. 4;**
4. Before installation of the module support frame, hook the modules **G** to the support frame **H** as shown in **Fig. 5** then, as shown in **Fig. 6,** fit the two anti-tampering locks **W** for each module (do the same for the second module support frame);
5. When you have more than one support frame, hook the support frame to the surface box starting from the left. For convenience we will described how to attach the left frame but the same must be carried out for the right frame. As shown in **Fig. 7,** hook the module support frame **H** (complete with modules) to the surface box **C** moving the frame as suggested from pointers. Ensure that the pivots **L (Fig. 7)** go inside the relevant housing **M** as shown in **Fig. 8;**
6. As shown on **Fig. 9,** pull back the module support frame **H** while moving it slightly to the left as suggested by the pointers;
7. As shown in **Fig. 10,** open the module support frame **H** as suggested by the pointer, hook the hinge locks **N** to the hinges **M,** make the required connections using the screwdriver provided **P** (flat blade end) and make the required adjustment by adjusting the settings (through openings **O**) and adjust trimmers;
8. Repeat the same operations described above for the second module support frame (or for the third if available);
9. When the system has been tested and is working correctly, move back the module support frames carefully, fix them to the surface box using the screwdriver provided **P** (torx end) and the pin machine torx screws **Q (Fig. 11). Note: do not over tighten the screws more than is necessary.**

INSTALLING A FLUSH MOUNTING DOOR STATION

When flush mounting and the number of modules is greater than 3, the required back boxes need to be linked together (before embedding them in the wall) as shown on **Fig. 14, 15 and 16:**

- Arrange the back boxes and remove knockouts to allow cables to be fed from one back box to the other;
- Hook the spacers to first back box then hook the second back box to obtain the result shown on **Fig. 16;**

1. Protect the module support frame fixing holes from dust then embed the back box into the wall (165-170cm between the top of the box and the floor level as shown on the **Fig. 1**) feeding the cables **E (Fig. 2)** through a previously opened hole in the box. Observe the direction of the box ensuring the hinge is on the left and take care that the box profile is in line with the finished wall profile;

> ⚠ **In order to prevent water ingress we highly recommend using a silicon sealant between the wall and the back box H (Fig.12);**

2. Continue from step **4** of surface mounting instructions , but at step **7** hook the hinge locks **N** as shown on **Fig. 13.**

> ⚠ **Note: if additional holes are made in the surface box, oxidation problems may appear unless the unprotected metal is coated with a protective paint.**

NOTES

- The screwdriver's blade has two sides, one flat and one torx, to select one of them unplug the blade from the screwdriver body and plug it into the required side.
- The example shows the use of only one back box bottom hole for wires, this is done to keep file drawings clear. Naturally the installer can use the left hole or the right or both if required.

HOW TO REMOVE THE CARD NAME HOLDER

- To avoid damage to the module front plate, tape the side that will be in contact with the screwdriver blade;
- Insert the screwdriver (flat side) into the card-holder hole as shown in **Fig. 17;**
- Move the screwdriver to the left as shown in **Fig. 18** to extract the card name holder;
- Edit the card name then replace it inside the holder and refit: insert the holder inside its housing from the left or right side then push the other side until it clips into place.

Art. 3181 Digital intercom for VX2300 2 Wire System

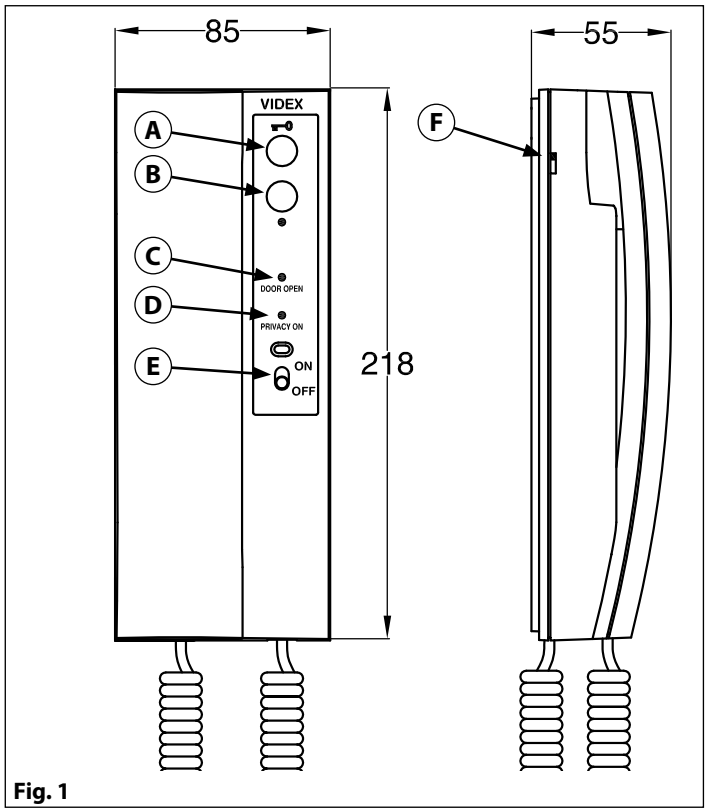

Fig. 1

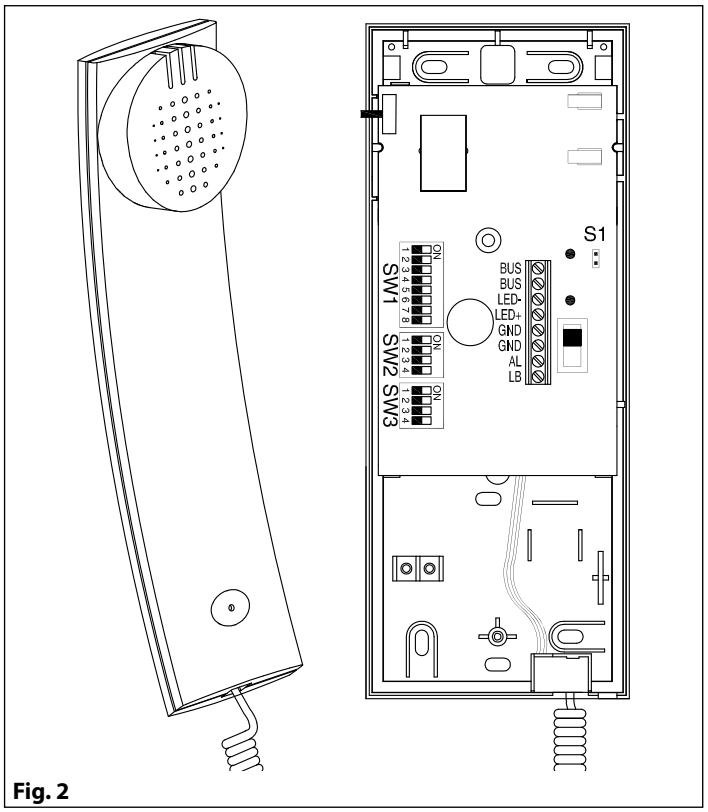

Fig. 2

DESCRIPTION

Intelligent intercom with "door open/intercommunicating call" push button (key), bus relay (Art. 2305) activation button (dot), "privacy ON-OFF" switch, "door open" and "privacy on" Led's and call tone volume control (3 levels). To reduce bus current all apartment devices are in a sleep mode when not used. In case a user forgot to replace the handset, each operation must be executed within 10 seconds of lifting the handset otherwise the handset returns to its sleep state. To then perform an operation it would be necessary to hang up the handset and pick it up again.

PUSH BUTTONS, LED'S AND CONTROLS (FIG. 1)	
A	Door open push button – Intercommunicating call. For an intercommunicating call, pick up the handset and press as many times as the extension or address value to call (see SW3 Intercommunication Settings).
B	Activate bus relay board Art. 2305 push button. To activate a bus relay pick up the handset and press as many times as the address value of the relay.
C	Door Open LED. Switched ON if the door is open. Its operation depends on additional connections.
D	Privacy ON LED. Switched ON when the privacy service is active
E	Privacy ON-OFF switch. The privacy duration time can be programmed. If the intercom is programmed for a specific privacy duration, after the service is enabled to "ON" (red LED ON), the service will automatically turn off when the time expires.
F	Call tone volume control (3 levels)

DIP-SWITCHES AND JUMPERS (FIG. 2)	
SW1	Switches from 1 to 7 are used for unit address (from 1 to 127 binary coded). Last switch (8) is not used.
SW2	Switches 1,2 and 3 are used to set privacy duration time. Switch 4 is not used.
SW3	Switches 1,2 and 3 are used to for intercommunication settings. Switch 4 is not used.
S1	Impedance terminator. The jumper must be normally closed. When more videophones/intercoms are connected in parallel (from a peripheral to another and so on until the last) the jumper must be open for all the intercoms except for the last following the connection order.

PROGRAMMING

After each programming operation carried out through dip-switches or jumpers it is necessary to temporary disconnect the phone from the BUS or from the power supply if locally powered.

SW1 - DEVICE ADDRESS

SWITCHES STATUS							BINARY CODE – DECIMAL VALUE							ADDRESS
7	6	5	4	3	2	1	64	32	16	8	4	2	1	
OFF	OFF	OFF	OFF	OFF	OFF	ON	0	0	0	0	0	0	1	1
OFF	OFF	OFF	OFF	OFF	ON	OFF	0	0	0	0	0	1	0	2
OFF	OFF	OFF	OFF	OFF	ON	ON	0	0	0	0	0	1	1	3
OFF	OFF	OFF	OFF	ON	OFF	OFF	0	0	0	0	1	0	0	4
OFF	ON	OFF	OFF	ON	OFF	ON	0	1	0	0	1	0	1	37
ON	ON	OFF	OFF	OFF	ON	ON	1	1	0	0	0	1	1	99

The table above shows how to set the address of the device. Considering that ON = 1 and OFF = 0, multiply each digit for the relevant decimal weight then sum the values obtained to get the address: E.g. as highlighted in the table OFF,ON,OFF,OFF,ON, OFF,ON in binary is equal to 0100101 then multiplying each digit for the relevant decimal weight you obtain the address that is 37.

Note: the maximum number of units allowed is 100 but the address of each unit can be a value between 1 and 127.

SW2 - PRIVACY DURATION TIME

SWITCHES STATUS				PRIVACY MODE (SWITCH 1)	PRIVACY DURATION (SWITCHES 2,3)
1	2	3	4		
OFF	OFF	OFF		The privacy duration time is set by switches 2 and 3. When enabled the privacy service will be disabled when the set time expires or the switch is moved back to off.	15 minutes
	ON	OFF			1 hour
	OFF	ON			4 hours
	ON	ON			8 hours
ON				No privacy time expiration: the privacy service is enabled or disabled only by the slide switch.	

SW3 - INTERCOMMUNICATION SETTINGS

SWITCHES STATUS				INTERCOMMUNICATION MODE (SWITCH 1)	UNIT EXTENSION (SWITCHES 2,3)
1	2	3	4		
OFF	OFF	OFF		Intercommunication allowed between units (same unit address) inside the same flat. To call an extension pick up the handset then press the "door open" button as many times as the extension value (Eg. extension 2 two times, 3 three times etc). **Each intercom/videophone in the same apartment must have a different extension address, the master address must always be set except when one of the intercom/videophone is set for apartment intercommunication (i.e. in a 3 intercom/videophone installation, one of the intercom/videophone must have the extension address 1 while the others must have different addresses).**	1 (master)
	ON	OFF			2 (slave)
	OFF	ON			3 (slave)
	ON	ON			4 (slave)
ON	OFF	OFF		Intercommunication allowed between videophones (different apartment). To call an extension pick up the handset then press the "door open" button as many times as the address value (Eg. extension 10 ten times, 12 twelve times etc)	

NOTE: Extension 1 is mandatory. On systems with more than one device in an apartment, each device must have a unique extension ID.

On installations where there are more than one intercom/videophone in the same apartment and intercommunication between different apartments is required, only one intercom/videophone may be set with this function (SW3.1=ON, SW3.2=OFF, SW3.3=OFF). The other intercom/videophones in the apartment must be set for local intercommunication with extension addresses "2-4" (slaves). From the intercom/videophone set for intercommunication with other apartments it will be not possible to intercommunicate within the apartment but slave extensions 2-4 will be able to intercommunicate with each other.

NUMBER OF RINGS

The number of rings can be set to 3 (factory preset) or 6. To change the number of rings proceed as follow:

- Disconnect the power supply from the system;
- Short the terminals "LB" and "GND";
- Reconnect the power supply to the system checking the privacy on LED and then remove the short between terminals "LB" and "GND";
- The number of LED flashes will be 1 for 3 rings or 2 for 6 rings.

Each time this operation is carried out the number of rings is switched between the values 3 and 6.

SIGNALS ON CONNECTION TERMINALS	
BUS	BUS connection terminals
BUS	
LED–	Door open LED ground signal input
LED+	Door open LED power supply input (+12Vdc)
GND	Ground signal
GND	Ground signal
AL	Alarm input (not implemented)
LB	Local Bell contact (put a push button between this terminal and the relevant GND terminal)

SPECIFICATION

Housing/Mounting:	3000 Series Intercoms / direct wall mounting
Push Buttons:	Yes, two
Programming:	Yes, carried out by the dip-switches inside the intercom
Controls:	Call tone volume and privacy ON-OFF switch
Power Supply:	Supplied by the BUS line
Working Temperature:	-10 +50°C

Art. 3183 Digital intercom for VX2300 2 Wire System

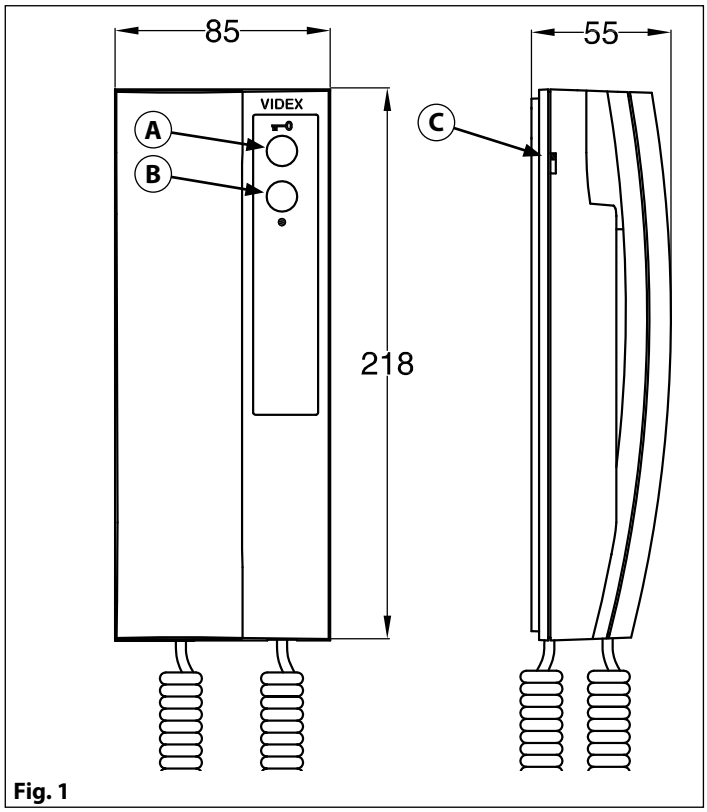

Fig. 1

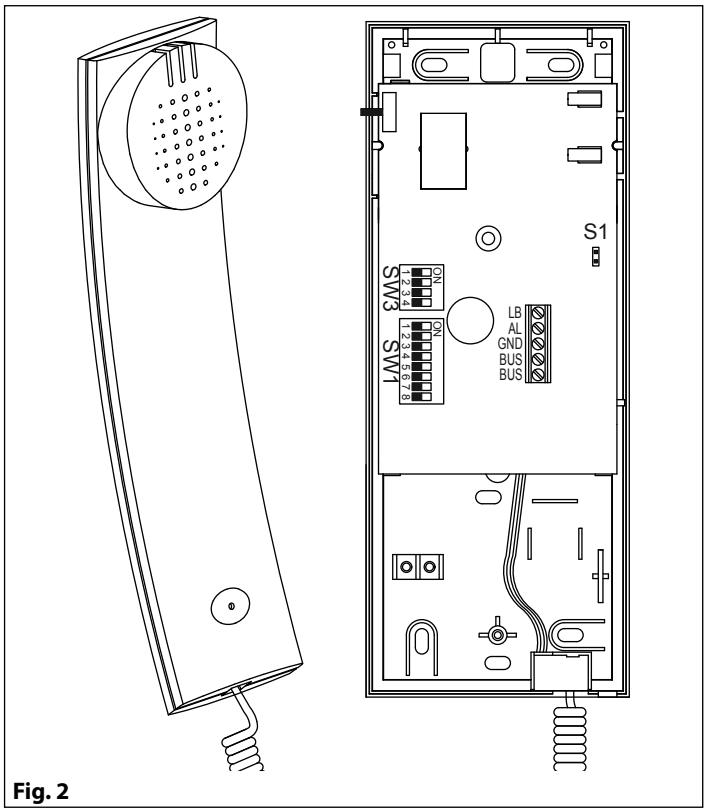

Fig. 2

DESCRIPTION

Intelligent intercom with "door open/intercommunicating call" push button (key), bus relay (Art. 2305) activation button (dot) and call tone volume control (3 levels). To reduce bus current all apartment devices are in a sleep mode when not used. In case a user forgot to replace the handset, each operation must be executed within 10 seconds of lifting the handset otherwise the handset returns to its sleep state. To then perform an operation it would be necessary to hang up the handset and pick it up again.

PUSH BUTTONS, LED'S AND CONTROLS (FIG. 1)	
(A)	Door open push button – Intercommunicating call. For an intercommunicating call, pick up the handset and press as many times as the extension or address value to call (see SW3 Intercommunication Settings).
(B)	Activate bus relay board Art. 2305 push button. To activate a bus relay pick up the handset and press as many times as the address value of the relay.
(C)	Call tone volume control (3 levels)

DIP-SWITCHES AND JUMPERS (FIG. 2)	
SW1	Switches from 1 to 7 are used for unit address (from 1 to 127 binary coded). Last switch (8) is not used
SW3	Switches 1,2 and 3 are used to for intercommunication settings. Switch 4 is not used.
S1	Impedance terminator. The jumper must be normally closed. When more videophones/intercoms are connected in parallel (from a peripheral to another and so on until the last) the jumper must be open for all the intercoms except for the last following the connection order.

PROGRAMMING

After each programming operation carried out through dip-switches or jumpers it is necessary to temporary disconnect the phone from the BUS or from the power supply if locally powered.

SW1 - DEVICE ADDRESS

SWITCHES STATUS							BINARY CODE – DECIMAL VALUE							ADDRESS
7	6	5	4	3	2	1	64	32	16	8	4	2	1	
OFF	OFF	OFF	OFF	OFF	OFF	ON	0	0	0	0	0	0	1	1
OFF	OFF	OFF	OFF	OFF	ON	OFF	0	0	0	0	0	1	0	2
OFF	OFF	OFF	OFF	OFF	ON	ON	0	0	0	0	0	1	1	3
OFF	OFF	OFF	OFF	ON	OFF	OFF	0	0	0	0	1	0	0	4
OFF	ON	OFF	OFF	ON	OFF	ON	0	1	0	0	1	0	1	37
ON	ON	OFF	OFF	OFF	ON	ON	1	1	0	0	0	1	1	99

The table above shows how to set the address of the device. Considering that ON = 1 and OFF = 0, multiply each digit for the relevant decimal weight then sum the values obtained to get the address: E.g. as highlighted in the table OFF,ON,OFF,OFF,ON, OFF,ON in binary is equal to 0100101 then multiplying each digit for the relevant decimal weight you obtain the address that is 37.
Note: the maximum number of units allowed is 100 but the address of each unit can be a value between 1 and 127.

SW3 - INTERCOMMUNICATION SETTINGS

SWITCHES STATUS				INTERCOMMUNICATION MODE (SWITCH 1)	UNIT EXTENSION (SWITCHES 2,3)
1	2	3	4		
OFF	OFF	OFF		Intercommunication allowed between units (same unit address) inside the same flat. To call an extension pick up the handset then press the "door open" button as many times as the extension value (Eg. extension 2 two times, 3 three times etc). **Each intercom/videophone in the same apartment must have a different extension address, the master address must always be set except when one of the intercom/videophone is set for apartment intercommunication (i.e. in a 3 intercom/videophone installation, one of the intercom/videophone must have the extension address 1 while the others must have different addresses).**	1 (master)
	ON	OFF			2 (slave)
	OFF	ON			3 (slave)
	ON	ON			4 (slave)
ON	OFF	OFF		Intercommunication allowed between videophones (different apartment). To call an extension pick up the handset then press the "door open" button as many times as the address value (Eg. extension 10 ten times, 12 twelve times etc)	

NOTE: Extension 1 is mandatory. On systems with more than one device in an apartment, each device must have a unique extension ID. On installations where there are more than one intercom/videophone in the same apartment and intercommunication between different apartments is required, only one intercom/videophone may be set with this function (SW3.1=ON, SW3.2=OFF, SW3.3=OFF). The other intercom/videophones in the apartment must be set for local intercommunication with extension addresses "2-4" (slaves). From the intercom/videophone set for intercommunication with other apartments it will be not possible to intercommunicate within the apartment but slave extensions 2-4 will be able to intercommunicate with each other.

NUMBER OF RINGS

The number of rings can be set to 3 (factory preset) or 6. To change the number of rings proceed as follow:

- Disconnect the power supply from the system;
- Short the terminals "LB" and "GND";
- Reconnect the power supply to the system checking the privacy on LED and then remove the short between terminals "LB" and "GND";
- The number of LED flashes will be 1 for 3 rings or 2 for 6 rings.

Each time this operation is carried out the number of rings is switched between the values 3 and 6.

SIGNALS ON CONNECTION TERMINALS	
LB	Local Bell contact (put a push button between this terminal and the relevant GND terminal)
AL	Alarm input (not implemented)
GND	Ground signal
BUS	Bus contacts
BUS	

SPECIFICATION

Housing/Mounting:	3000 Series Intercoms / direct wall mounting
Push Buttons:	Yes, two
Programming:	Yes, carried out by the dip-switches inside the intercom
Controls:	Call tone volume
Power Supply:	Supplied by the BUS line
Working Temperature:	-10 +50°C

Art. 5188 Hands free intercom

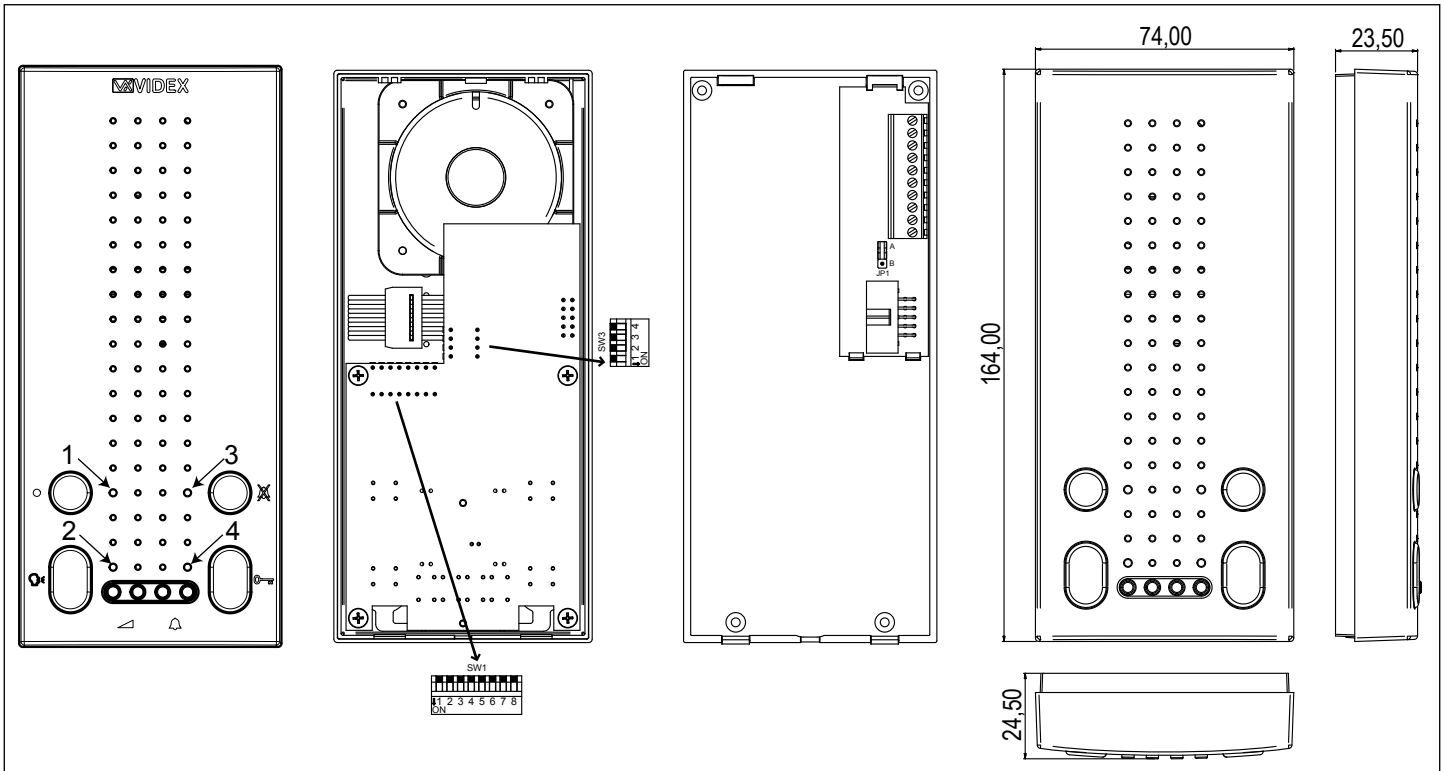

Fig. 1

DESCRIPTION

Voice switched hands free intercom with buttons to control "answer/end conversation/recall/simplex conversation", "door open/intercommunicating call", "privacy on/off" (programmable duration) and "BUS relay control" (Art. 2305) button. In addition there are 4 LED's* to indicate the status of "answer/end conversation", "door open/closed", "privacy on/off" and programming status. Call tone and loudspeaker volume controls, through assigned buttons, are also incorporated on this model. In addition to programming required from the VX2300 digital system (address, extension address and intercommunication mode) it is possible to program the melody, the number of rings and the privacy service duration. Surface wall mount installation.

* The operation of some LED's and the functions described may require additional cabling.

PUSH BUTTONS, LEDS AND CONTROLS (FIG. 1)	
●	**Bus Relay Button to Activate bus relay board Art. 2305.** To activate a bus relay press as many times as the address value of the relay.
	Answer button. On an incoming call, operation of this button allows the user to answer and converse with the visitor. LED 2 will illuminate.
	Camera recall push button. Press as many times as the DEVICE N. of the door station to switch on.
	Switch off button. With the system switched on, momentary operation of the button will switch the video monitor off. The intercom will also automatically switch off after a time delay if the button is not pressed. LED 2 will switch off.
	Simplex button. Pressing and holding the button for more than 3 seconds will switch the intercom into SIMPLEX speech mode. Press and hold the button to speak to the caller (LED 2 will flash rapidly), release the button to listen (LED 2 will flash slowly). If the button is not pressed for 10 seconds the intercom will switch off. The intercom will revert to duplex speech when another call is made.
	Privacy ON-OFF push button. • If the unit is switched on, press and keep pressed this button for more than 3 seconds to enable/disable the service. The relative LED will illuminate when the privacy service is enabled. • If the unit is switched off, keep this button pressed together with the "speak" button until the privacy LED switches ON.
	Intercommunicating call button. For an intercommunicating call, when the intercom is in stand-by, press as many times as the extension or address value to call.
	Door open button. During a call, operation of this button will activate the "door open" relay (NO1, NC1, COM1). LED 4 will illuminate if terminal 6 has been connected to a door contact.

PUSH BUTTONS, LEDS AND CONTROLS (FIG. 1)	
LED 1	Programming LED.
LED 2	LED relating to the operation of the answer/switch off/camera recall/simplex button.
LED 3	LED relating to the operation of privacy button.
LED 4	LED relating to the operation of door open button(powered from the connection terminal "2" & GND "1" on the connection board).
	Loudspeaker volume control.
	Call tone volume control.

PROGRAMMING

The intercom setup consists of the following settings:

- Number of Rings;
- Privacy duration;
- Melody selection;
- Unit address (1..127, switches 1 to 7 of SW1);
- Intercommunication mode (between apartments or within apartment switch 1 of SW3);
- Extension address (1..4, switches 2,3 of SW3);
- Bus Termination (JP1 jumper on connection board);

The programming of the number of rings, melody and privacy duration are carried out through the intercom push buttons , all other settings are carried out on the two dip-switch banks (SW1 and SW3) on the rear side of the video monitor. The BUS termination depends on the position of JP1 on the connection board.

Except for when programming the number of rings, it is necessary to temporarily remove the power supply from the unit after making programming changes.

NUMBER OF RINGS, PRIVACY DURATION AND MELODY SELECTION

First of all make a recall to switch on the unit then proceed with the programming operation. To alter the number of rings and select the melody, the intercom must be in program mode. This is achieved by pressing the two following buttons at the same time (left button of the volume control and the right button of the call tone volume control) see Fig. 1.When the programming mode is entered LED 1 (Fig. 1) starts flashing. This will automatically reset after 20 seconds of idle time.

NUMBER OF RINGS

- When in the programming mode press and hold the button, LED 1 will stop flashing and LED 3 (Fig. 1) will start to flash showing the number of rings (each flash = 1 ring i.e. 6 flashes = 6 rings).
- Once the value of rings has been reached release the button.
- Wait approx 10 seconds for LED 1 to stop flashing to signal that the new value is stored and program mode has exited.

PRIVACY DURATION

- When in the programming mode press and hold the button, LED 1 will stop flashing and LED 3 (Fig. 1) will start to flash showing the number of times the button is pressed (each flash = 15 minutes i.e. 8 flashes = 2 hours).
- Once the duration required has been reached release the button.
- Wait approx 10 seconds for LED 1 to stop flashing to signal that the new value is stored and program mode has exited.

MELODY SELECTION

- When in the programming mode, press left or right call tone volume control buttons (press the left button to navigate backward or the right button to navigate forward in the melodies selection menù) until the videomonitor plays the selected melody (during the melody play the LED1 stops flashing).
- Before press again one of the two buttons to select previous (left button) or next (right button) melody, wait for LED1 starts flashing again then press and hold pressed one button until the selected melody is played.
- Once reached the required melody, wait approx 10 seconds for LED 1 to stop flashing to signal that the new value is stored and program mode has exited.

NOTES

The second melody increases its volume at each ring: first ring starts at minimum volume level and adjusts up to the maximum volume level on the last ring. There are 4 volume levels: Rings after this will all play at full volume.

VIDEOPHONE ADDRESS – SW1.1..7

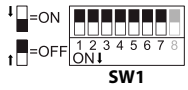

The table below shows how to set the address of the videophone. Considering that ON = 1 and OFF = 0, multiply each digit for the relevant decimal weight then sum values obtained to get the address: E.g. as highlighted in the table OFF, ON,OFF, OFF, ON, OFF, ON in binary is equal to 0100101 then multiplying each digit for the relevant decimal weight you obtain the address that is 37.

SWITCHES STATUS							BINARY CODE - DECIMAL WEIGHT							ADDRESS
7	**6**	**5**	**4**	**3**	**2**	**1**	**64**	**32**	**16**	**8**	**4**	**2**	**1**	
OFF	OFF	OFF	OFF	OFF	OFF	ON	0	0	0	0	0	0	1	1
OFF	OFF	OFF	OFF	OFF	ON	OFF	0	0	0	0	0	1	0	2
OFF	OFF	OFF	OFF	OFF	ON	ON	0	0	0	0	0	1	1	3
OFF	OFF	OFF	OFF	ON	OFF	OFF	0	0	0	0	1	0	0	4
OFF	ON	OFF	OFF	ON	OFF	ON	0	1	0	0	1	0	1	37
ON	ON	ON	ON	ON	ON	ON	1	1	1	1	1	1	1	127

Note: The maximum number of units allowed is 100 but the address of each unit can be a value between 1 and 127. Set switch 8 to OFF position.

INTERCOMMUNICATION MODE – SW3.1

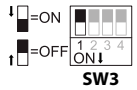

This switch establishes the intercommunication mode: in OFF position (default) intercommunication is between units in the same apartment (same addresses but different extension); in ON position the intercommunication is between units in different apartments (different addresses).

On installations where there are more than one intercom/videophone in the same apartment and intercommunication between different apartments is required, only one intercom/videophone may be set with this function (SW3.1=ON, SW3.2=OFF, SW3.3=OFF). The other intercom/videophones in the apartment must be set for local intercommunication with extension addresses "2-4" (slaves). From the intercom/videophone set for intercommunication with other apartments it will be not possible to intercommunicate within the apartment but slave extensions 2-4 will be able to intercommunicate with each other.

EXTENSION NO – SW.2..3

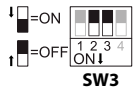

If the intercommunication between apartments is enabled (switch 1 of SW3 = ON) leave these two switches in default position (both to OFF). Otherwise, if the intercommunication is between the same apartment (switch 1 of SW3 = OFF), set the extension addresses starting always from 1.

Note: Set switch "4" to OFF position

2	3	EXTENSION NO.
OFF	OFF	1 (default, master)
ON	OFF	2 (slave)
OFF	ON	3 (slave)
ON	ON	4 (slave)

BUS LINE TERMINATION JP1

The factory preset for this jumper is "A" position: termination enabled. In case of more units (intercoms, videophones or video monitors) in a parallel connection (bus wires are connected to the terminals of the first unit then from this to the second and so on up to 4 units max) JP1 must be set to A position only for the last unit in the chain while on all other units must be set to B position (bus termination disabled). In case of units of different type, videophones, video monitor, hands free or standard intercoms etc. remains fixed the rule that the bus termination must be enabled only on the last unit in order of connection.

INTERCOM CONNECTION BOARD

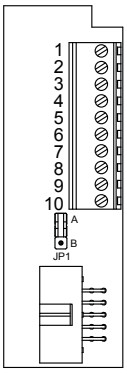

Fig. 2

SIGNALS ON CONNECTION TERMINALS		
Terminal	**Signal**	**Description**
1	**GND**	Ground
2	**LED**	Auxiliary LED +12Vdc input
3		
4		
5	**LB**	Local bell active low input
6	**AL**	Alarm input (not implemented yet)
7		
8	**BUS2**	Bus input
9		
10	**BUS1**	Bus input

SPECIFICATION

Housing/Mounting:	5000 Series Intercoms / direct wall mount
Push buttons:	Yes, 4
Programming:	Yes, carried out by the dip-switches located on the rear of the videophone
Controls:	Loudspeaker and call tone volume
Power Supply:	Supplied by the BUS line
Power consumption:	Stand-by: 0.7mA Operating: 20mA
Working Temperature:	-10 +50 °C

5000 Series Hands free intercom wall mounting instructions

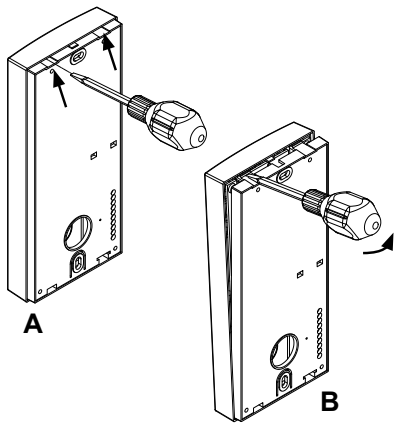

Fig. 1

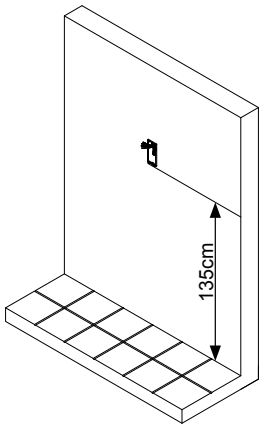

Fig. 3

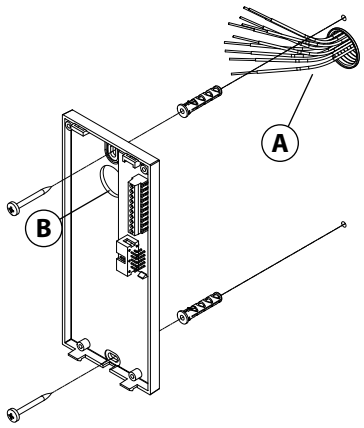

Fig. 5

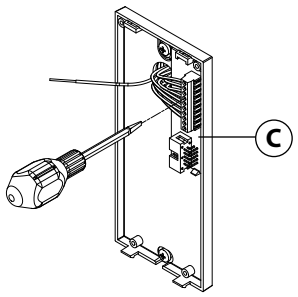

Fig. 2

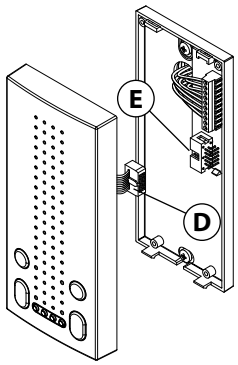

Fig. 4

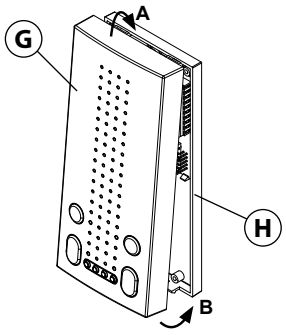

Fig. 6

1. As shown in **Fig. 1**, looking at the rear of the intercom, insert the tip of a flat blade screwdriver into one of the two openings **(Fig. 1A)** then slightly move the screwdriver in an upward direction to release the front from the back plate and opening the intercom unit **(Fig. 1B)**. **Take care!** The back plate of the intercom houses the pcb connection board which is normally connected to the pcb in the front of the intercom by the ribbon cable, the ribbon cable should not be connected when first opened.
2. Place the back plate of the intercom against the wall at approximately 135cm **(Fig. 2)** above finished floor level, then mark the fixing holes taking into account that the cable group (A) must feed into the opening (B) **(Fig. 3)**.
3. As shown in **Fig. 3**, fix the back plate of the intercom to the wall feeding the cable group (A) through opening (B).
4. Using a flat blade screwdriver connect the wires to the pcb connection board (C) as shown in **Fig. 4**, according to the installation diagram provided.
5. Connect ribbon cable plug (D) from the front plate into plug (E) on the pcb connection board as shown in **Fig. 5**.
6. Close the intercom by hooking the front plate (G) to the back plate (H) as described below:

- Hook the top of the front plate (G) to the top of the back plate as shown by pointer **A** in **Fig. 6**.
- Move the lower side of the front plate (G) towards the back plate (H) and press until the unit locks into the back plate of the intercom.

To open the intercom once installed, firmly grasp the bottom sides of the front plate cover, pull forward in an upward direction to separate the front cover from the back plate as in **Fig. 6**.

⚠ **NB. Please take care when opening to avoid damage, remember that the ribbon cable connects the front plate to the back plate connector pcb.**

Art. 3686 Digital videophone

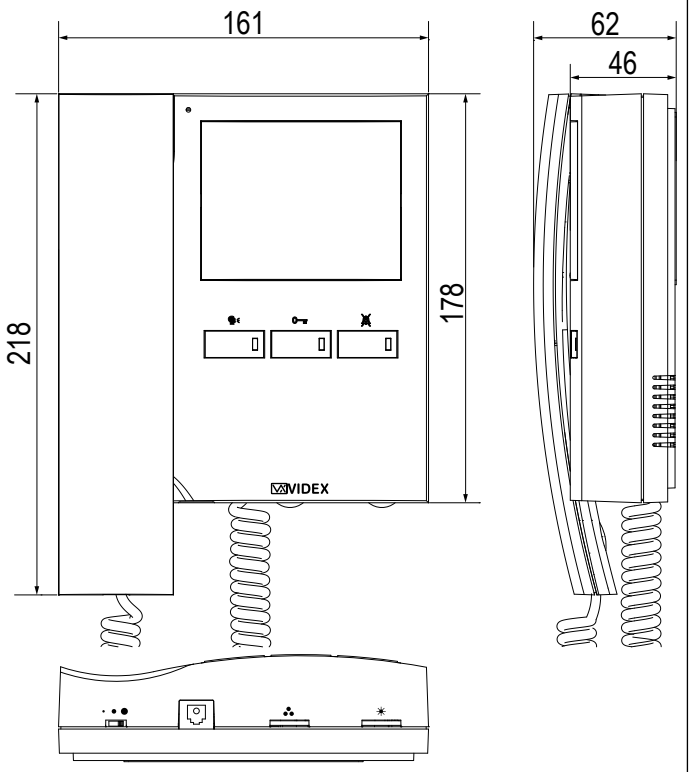

Fig. 1

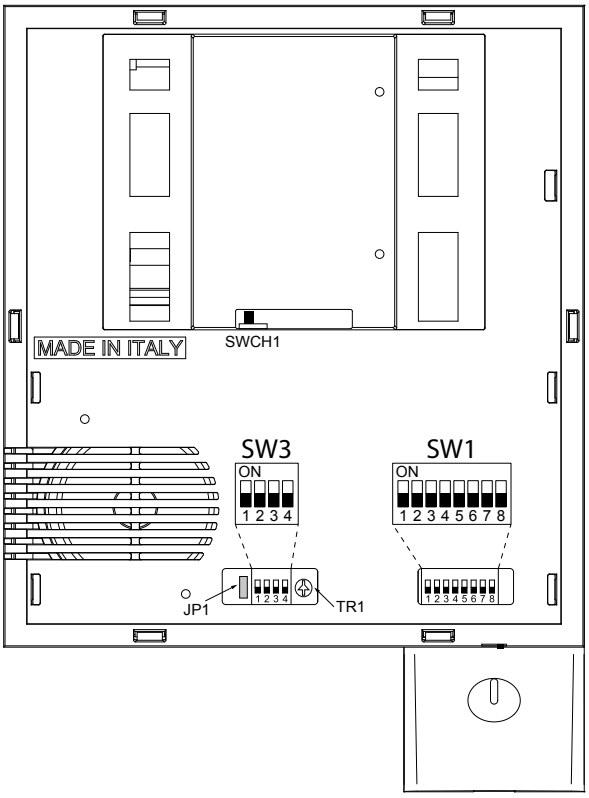

Fig. 2

DESCRIPTION

An intelligent Videophone using 3.5" full colour active matrix LCD monitor for VX2300. Including 3 buttons "camera recall", "door-open/intercommunicating call", "privacy/service" plus 3 LED's* for visual indication of all functions. Adjustments & programmable options: call tone volume on 3 levels (low, medium, high), picture hue, brightness and contrast, call tone melody, number of rings, privacy duration and address. Also includes a local bell function. The Art. 3686 is surface mount and requires the Art. 5980 connection board and wall mounting plate.

PUSH BUTTONS, LEDS AND CONTROLS (FIG. 1)	
	Camera recall push button. Pick up the handset and press as many times as the DEVICE N. of the door station to switch on.
	Camera switch push button. If the door station uses the Art. 4303N plus the Art. 4330N, pressing this button during a conversation switches the video signal coming from the camera module to the video signal coming from the camera module input for external camera. During the conversation, press and keep pressed the button until the camera switches. Repeat the operation to switch back to main camera.
	Door open push button. Press this button to open the door when you receive a call.
	Dry contact relay push button. During a conversation, keep pressed this button for more than 3 seconds to close the dry contacts relay (terminals "3" and "5" on Art. 5980 PCB connection board). The internal link remains closed until the button remains pressed (Max 50Vdc@100mA).
	Intercommunication push button. For an intercommunicating call, pick up the handset and press as many times as the extension or address value to call (see SW3 Intercommunication Settings).
	Privacy ON-OFF push button. To enable the function press this button when the videophone is in stand-by. The privacy duration time can be programmed.
	Activate bus relay board Art. 2305 push button. To activate a bus relay, during a conversation, press this button quickly as many times as the address value of the relay.

PUSH BUTTONS, LEDS AND CONTROLS (FIG. 1)	
LED	**On LED.** It illuminates when the videophone is switched ON.
LED	**Generic use LED.** It is supplied from the terminals "6" and "7" of the PCB connection board Art. 5980. Normally used to signal the door status (open or closed).
LED	**Privacy on LED.** It illuminates when the privacy service is enabled.
• ● ●	Call tone volume control (3 levels).
	Brightness control.
	Colour intensity control.
JP1	Jumper for future expansion (must remain closed).
TR1	Contrast control trimmer (rotate left to increase or right to decrease.
SWCH1	Bus termination switch (Left position = BUS termination active, Right position = BUS termination disabled)

PROGRAMMING

The videophone setup consists of the following settings:

- Number of Rings;
- Melody selection;
- Privacy duration;
- Unit address (1..127, switches 1 to 7 of SW1);
- Bus Termination (open or close, switch SWCH1);
- Intercommunication mode (between apartments or within apartment, switch 1 of SW3);
- Extension address (1..4, switches 2,3 of SW3);
- Slave mode (switch 4 of SW3).

The programming of the number of rings, melody and privacy duration are carried out through the videophone push buttons, all other settings are carried out on the two dip-switch banks (SW1 and SW3) on the rear side of the video monitor (all the settings can be done without opening the videophone).

Except the number of rings programming, it is necessary to remove temporary the power supply after making any other programming changes.

NUMBER OF RINGS, MELODY SELECTION AND PRIVACY DURATION

To make these changes, it is necessary to pick up the handset first when the system is in stand-by.

NUMBER OF RINGS

- Keep pressed the button until the two LEDs and switch on.
- Press the button for the number of times corresponding to the required number of rings to set. A beep confirms each time the button is pressed.
- Once the required number of rings is reached, wait approx 5 seconds for the two LED's to switch off. The new value is stored.

MELODY SELECTION

- Keep pressed the button until the two LEDs and switch on. The unit emits the current selected melody.
- Press the button and keep it pressed to listen the next melody. Repeat the operation until the required melody is found.
- Once the required melody is found, wait approx 5 seconds for the two LED's to switch off. The new melody is set.

PRIVACY DURATION

- Keep pressed the button until the two LEDs and are switched on.
- Press the button for the number of times corresponding to the required privacy duration to set. Each time the button is pressed, the duration is increased by 15 minutes: i.e. to set 2 hours, press the button 8 times.
- Once the required privacy time is reached, wait approx 5 seconds for the two LED's to switch off. The new duration is set.

VIDEOPHONE ADDRESS – SW1.1..7

SW1.1..7

The table below shows how to set the address of the videophone. Considering that ON = 1 and OFF = 0, multiply each digit for the relevant decimal weight then sum values obtained to get the address: E.g. as highlighted in the table OFF,ON,OFF,OFF,ON, OFF,ON in binary is equal to 0100101 then multiplying each digit for the relevant decimal weight you obtain the address that is 37.

SWITCHES STATUS							BINARY CODE - DECIMAL WEIGHT							ADDRESS
7	**6**	**5**	**4**	**3**	**2**	**1**	**64**	**32**	**16**	**8**	**4**	**2**	**1**	
OFF	OFF	OFF	OFF	OFF	OFF	ON	0	0	0	0	0	0	1	1
OFF	OFF	OFF	OFF	OFF	ON	OFF	0	0	0	0	0	1	0	2
OFF	OFF	OFF	OFF	OFF	ON	ON	0	0	0	0	0	1	1	3
OFF	OFF	OFF	OFF	ON	OFF	OFF	0	0	0	0	1	0	0	4
OFF	ON	OFF	OFF	ON	OFF	ON	0	1	0	0	1	0	1	37
ON	ON	ON	ON	ON	ON	ON	1	1	1	1	1	1	1	127

Note
The maximum number of units allowed is 100 but the address of each unit can be a value between 1 and 127.

VIDEOPHONE END OF LINE TERMIANTION – SWCH1

Looking at the videophone from the rear:

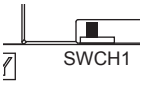

Move the switch to the right position to enable the bus termination

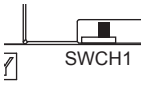

Move the switch to the left position to disable the bus termination

In case of more units (intercoms, videophones or video monitors) in a parallel connection (bus wires are connected to the terminals of the first unit then from this to the second and so on up to 4 units max) the BUS termination must be enabled only for the last unit in the chain while on all other units it must be set to disabled.

INTERCOMMUNICATION MODE – SW3.1

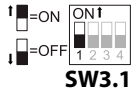

SW3.1

This switch establishes the intercommunication mode: in OFF position (default) intercommunication is between units in the same apartment (same addresses but different extension); in ON position the intercommunication is between units in different apartments (different addresses).

On installations where there are more than one intercom/videophone in the same apartment and intercommunication between different apartments is required, only one intercom/videophone may be set with this function (SW3.1=ON, SW3.2=OFF, SW3.3=OFF). The other intercom/videophones in the apartment must be set for local intercommunication with extension addresses "2-4" (slaves). From the intercom/videophone set for intercommunication with other apartments it will be not possible to intercommunicate within the apartment but slave extensions 2-4 will be able to intercommunicate with each other.

EXTENSION NO – SW.2..3

SW3.2..3

If the intercommunication between apartments is enabled (switch 1 of SW3 = ON) leave these two switches in default position (both to OFF). Otherwise, if the intercommunication is between the same apartment (switch 1 of SW3 = OFF), set the extension addresses starting always from 1. During the external call, all video monitors in the same flat will ring but the video will be shown only from the videophone with extension address 1.

2	3	EXTENSION NO.
OFF	OFF	1 (default, master)
ON	OFF	2 (slave)
OFF	ON	3 (slave)
ON	ON	4 (slave)

SLAVE MODE - SW3.4

SW3.4

This set up concerns the answering mode of the video monitor when there is more than one unit (max 4) in the same apartment. OFF (default) = during a call, only the video monitor with extension 1 (master) will show the video. ON = the video monitor will be switched on independently of the extension address: in this case the video monitor must be supplied locally using a power supply Art. 2321 and connecting respectively BUS+ to terminal +VAUX and BUS- to terminal GND on the connection terminals (the local power supply is required for each black & white slave videophone or starting from the third slave videophone when they are all colour videophones).

If you set ON this switch for one slave videophone, you must set ON the same switch also for the relevant master videophone.

VIDEOMONITOR CONNECTION BOARD ART. 5980

SIGNALS ON CONNECTION TERMINALS

Terminal	Signal	Description
1	GND	Ground
2	BUS1	Bus input
3	C	Dry contacts relay common contact (during a conversation, keep pressed the button 0⊸ for more than 3 seconds to enable the internal link between terminals "3" and "5" – the link remains until the button remains pressed) Max 50Vdc @ 100mA
4	BUS2	Bus input
5	NO	Dry contacts relay common contact (during a conversation, keep pressed the button 0⊸ for more than 3 seconds to enable the internal link between terminals "3" and "5" – the link remains until the button remains pressed) Max 50Vdc @ 100mA
6	DOL	Auxiliary LED power supply input (+12Vdc)
7	DOL	Auxiliary LED power supply input (ground)
8	GND	Ground
9	GND	Ground
10	LB	Local bell input (active low)
11	GND	Ground
12		
13		
14	+VAUX	Auxiliary power supply input (to be used when the switch 4 of SW3 is set to ON)
15		
16		
17		
18	AL	Alarm input (not implemented yet)
19	AL-LB_GND	Ground output for use in combination with "AL" & "LB" active low inputs
20		

SPECIFICATION

Housing/Mounting: 3600 Series Videophones / mounting plate plus connection board
Push buttons: Yes, 3
Programming: Yes, carried out by the buttons and the dip-switches located on the rear of the videophone
Controls: Call tone volume, brightness and hue
Power Supply: Supplied by the BUS line
Power Consumption: Standby: 0.9mA
Operating: 175mA
Working Temperature: -10 +50 °C

3600 Series Videophone wall mounting instructions

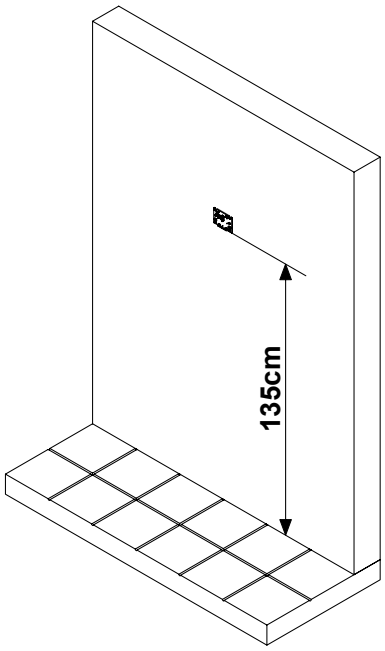

Fig. 1

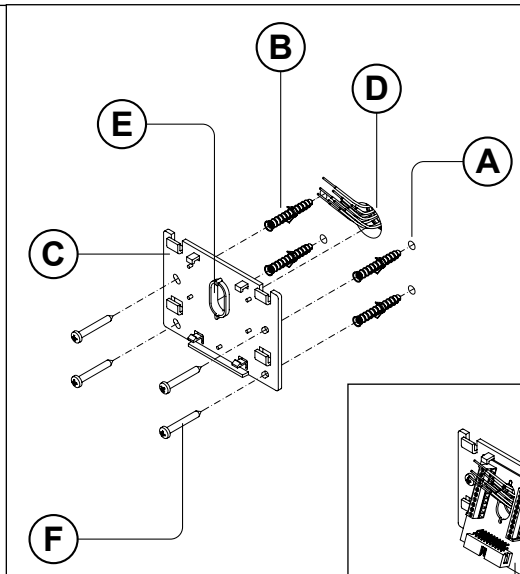

Fig. 2

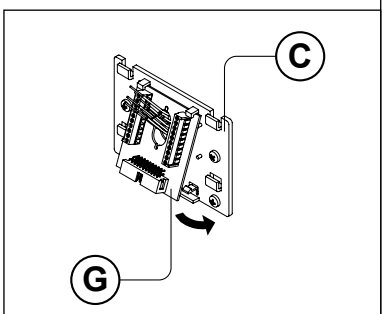

Fig. 3

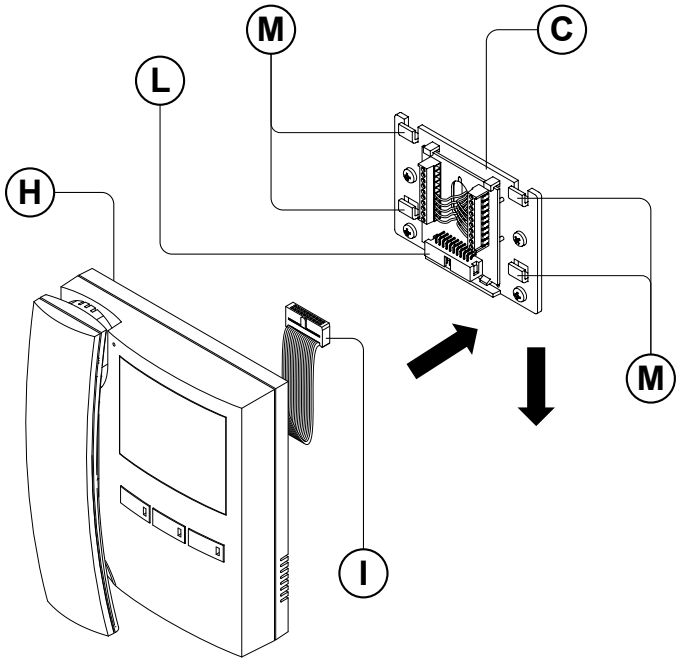

Fig. 4

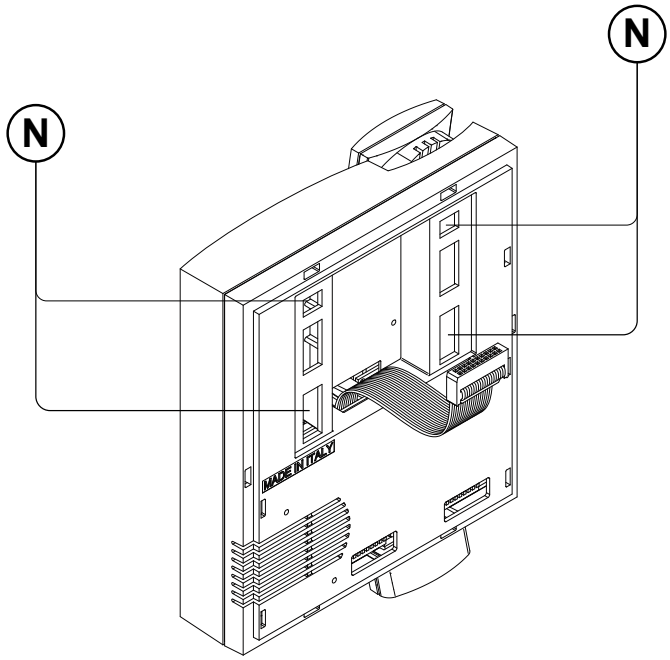

Fig. 5

1. Cables must be fed through the opening **E** (**Fig. 2**) of the mounting plate **C**, which should be fitted approximately 135cm from finished floor level as shown in **Fig. 1**;
2. Place the mounting plate **C** against the wall feeding the wire group **D** through opening **E** of the mounting plate and mark the fixing holes **A** (**Fig. 2**);
3. Drill the fixing holes **A**, insert the wall plugs **B** then with the cables threaded through opening **E** fix the mounting plate **C** to the wall with the 4 screws provided **F** (**Fig. 2**);
4. Hook the PBC connection board **G** to the mounting plate **C** as shown in **Fig. 3** and connect the wires (using the screwdriver provided) to the terminals as shown in the diagram provided;
5. Once the wires are connected, hook the videophone **H** to the mounting plate **C** as shown in **Fig. 3**;
6. Connect the Plug **I** on the ribbon cable from the videophone to the plug **L** on the PCB connection board **G**;
7. Place the videophone **H** against the 4 hooks **M** on the mounting plate **C** (in line with the 4 openings **N** on the rear side of the videophone **Fig. 5**) and push down as suggested by the pointers in **Fig. 4**, the videophone will lock into place;
8. To remove the videophone, hold it firmly and push the unit in an upward direction until the videophone **H** unlocks from the mounting plate **C**.

Art. SL5488N Slim hands free videomonitor

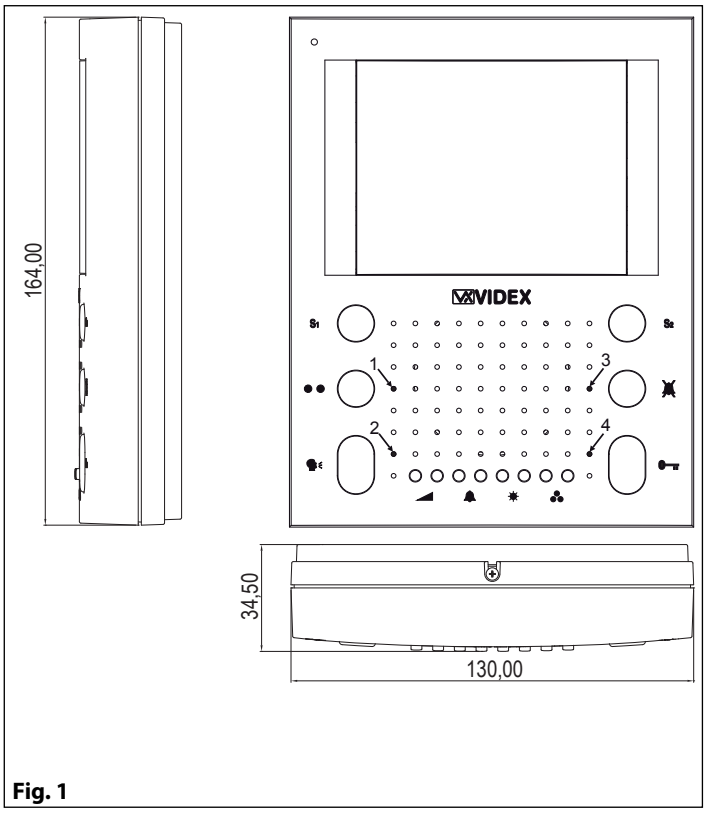

Fig. 1

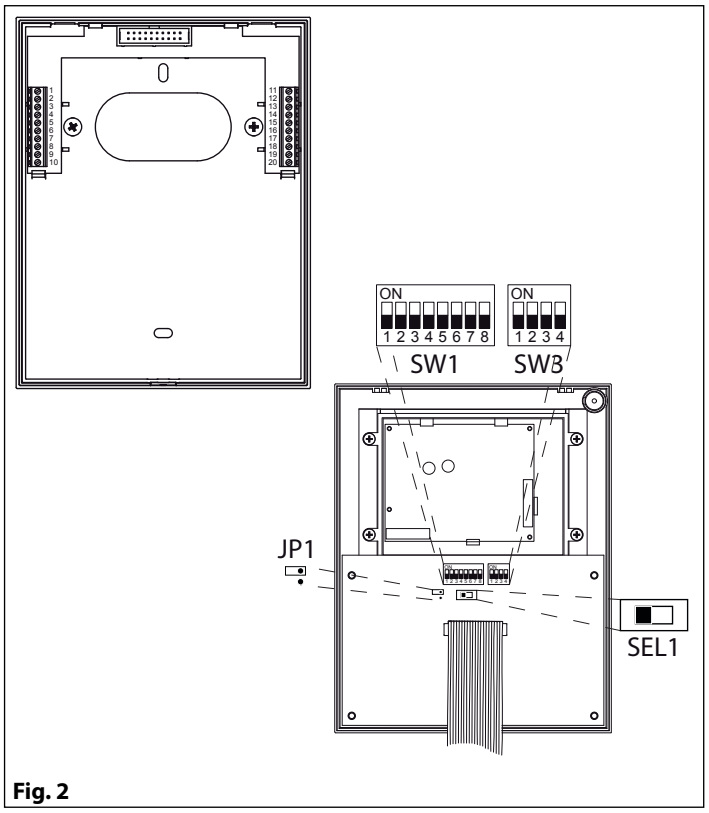

Fig. 2

DESCRIPTION

An intelligent Hands-free surface video monitor employing a colour 3.5" active matrix LCD display, with push buttons for "door open/intercommunicating call", "answer/camera recall", "privacy on/off", "BUS relay activation" and 2 service buttons plus 4 LED's associated with 4 main buttons. In addition to the above the unit has controls for loudspeaker volume, call tone volume, brightness and hue with programmable number of rings, privacy duration and intercommunication mode.

PUSH BUTTONS, LEDS AND CONTROLS (FIG. 1)	
S1	**Service push button.** When pressed, shorts terminal "S1" to terminal "GND" (ground).
● ●	**Bus Relay Button to Activate bus relay board Art. 2305.** To activate a bus relay press as many times as the address value of the relay.
	Answer button. On an incoming call, operation of this button allows the user to answer and converse with the visitor. LED 2 will illuminate.
	Camera recall push button. Press as many times as the DEVICE N. of the door station to switch on.
	Switch off button. With the system switched on (monitor on), momentary operation of the button will switch the video monitor off. The videomonitor will also automatically switch off after a time delay if the button is not pressed. LED 2 will switch off.
	Simplex button. Pressing and holding the button for more than 3 seconds will switch the videomonitor into SIMPLEX speech mode. Press and hold the button to speak to the caller (LED 2 will flash rapidly), release the button to listen (LED 2 will flash slowly). If the button is not pressed for 10 seconds the videomonitor will switch off. The videomonitor will revert to duplex speech when another call is made.
S2	**Service push button.** When pressed, shorts terminal "S2" to Terminal "GND" (ground).
	Privacy ON-OFF push button. Press and keep pressed this button until the relevant LED switches ON/OFF to enable/disable the service.
	Camera select button. With a conversation in progress, press to switch from door station camera to external camera (requires Art. 4330N and external camera) and viceversa.

PUSH BUTTONS, LEDS AND CONTROLS (FIG. 1)	
	Intercommunicating call button. For an intercommunicating call, when the videomonitor is in stand-by, press as many times as the extension or address value to call.
	Door open button. During a call, operation of this button will activate the "door open" relay (NO1, NC1, COM1). LED 4 will illuminate if terminal 6 has been connected to a door contact.
LED 1	LED for programming purposes.
LED 2	LED relating to the operation of the answer/switch off/camera recall/simplex button.
LED 3	LED relating to the operation of privacy button.
LED 4	LED relating to the operation of door open button(powered from the connection terminal "6" of Art. 5980)
	Loudspeaker volume control.
	Call tone volume control.
	Brightness control.
	Colour intensity control.

PROGRAMMING

The videomonitor setup consists of the following settings:

- Number of Rings;
- Privacy duration;
- Melody selection;
- Unit address (1..255, switches 1 to 8 of SW1);
- Bus Termination (open or close, switch SEL1 position "Term.OFF" or "Term.ON");
- Use with distribution box Art.317 (JP1 Closed if the videophone is connected to one Art.317)
- Intercommunication mode (between apartments or within apartment switch 1 of SW3);
- Extension address (1..4, switches 2,3 of SW3);
- Slave mode (switch 4 of SW3);
- Privacy duration (switches 1,2 and 3 of SW2)

The programming of the number of rings, privacy duration and melody are carried out through the videomonitor push buttons , all other settings are carried out on the two dip-switch banks (SW1 and SW3) on the rear side of the video monitor (the back cover need to be removed).

Except the number of rings programming, it is necessary to remove temporary the power supply after making any other programming changes.

NUMBER OF RINGS, MELODY SELECTION AND PRIVACY DURATION

First of all make a camera recall to switch on the unit then proceed with the programming operation.To alter the number of rings and select the melody, the videomonitor must be in program mode. This is achieved by operating the two following buttons at the same time (left button of the volume control and the right button of the colour intensity control) see Fig.1A 8 small buttons towards the bottom of the face plate (far left button and far right button together). When the programming mode is entered LED 1 (Fig. 1) starts flashing. This will automatically reset after 20 seconds of idle time.

NUMBER OF RINGS

- When in the programming mode press and hold the button, LED 1 will stop flashing and LED 3 (Fig. 1) will start to flash showing the number of rings (each flash = 1 ring i.e. 6 flashes = 6 rings).
- Once the value of rings has been reached release the button.
- Wait approx 10 seconds for LED 1 to stop flashing to signal that the new value is stored and program mode has exited.

PRIVACY DURATION

- When in the programming mode press and hold the button, LED 1 will stop flashing and LED 3 (Fig. 1) will start to flash showing the number of times the button is pressed (each flash = 15 minutes i.e. 8 flashes = 2 hours).
- Once the duration required has been reached release the button.
- Wait approx 10 seconds for LED 1 to stop flashing to signal that the new value is stored and program mode has exited.

MELODY SELECTION

- When in the programming mode, press left or right call tone volume control buttons 🔔 (press the left button to navigate backward or the right button to navigate forward in the melodies selection menù) until the videomonitor plays the selected melody (during the melody play the LED1 stops flashing).
- Before press again one of the two buttons to select previous (left button) or next (right button) melody, wait for LED1 starts flashing again then press and hold pressed one button until the selected melody is played.
- Once reached the required melody, Wait approx 10 seconds for LED 1 to stop flashing to signal that the new value is stored and program mode has exited.

NOTES

The second melody increases its volume at each ring: first ring starts at minimum volume level up to the maximum volume level on the last ring. Are available 4 levels of volume: if are set 6 rings, the fourth, the fifth and the sixth will be emitted at the maximum volume level.

VIDEOPHONE ADDRESS – SW1.1..8

SW1.1..8

The table above shows how to set the address of the videophone. Considering that ON = 1 and OFF = 0, multiply each digit for the relevant decimal weight then sum values obtained to get the address: E.g. as highlighted in the table OFF,ON,OFF,OFF,ON, OFF,ON in binary is equal to 0100101 then multiplying each digit for the relevant decimal weight you obtain the address that is 37.

SWITCHES STATUS								BINARY CODE – DECIMAL WEIGHT								ADDRESS
8	**7**	**6**	**5**	**4**	**3**	**2**	**1**	**128**	**64**	**32**	**16**	**8**	**4**	**2**	**1**	
OFF	OFF	OFF	OFF	OFF	OFF	OFF	ON	0	0	0	0	0	0	0	1	1
OFF	OFF	OFF	OFF	OFF	OFF	ON	OFF	0	0	0	0	0	0	1	0	2
OFF	OFF	OFF	OFF	OFF	OFF	ON	ON	0	0	0	0	0	0	1	1	3
OFF	OFF	OFF	OFF	OFF	ON	OFF	OFF	0	0	0	0	0	1	0	0	4
OFF	OFF	ON	OFF	OFF	ON	OFF	ON	0	0	1	0	0	1	0	1	37
ON	ON	ON	ON	ON	ON	ON	ON	1	1	1	1	1	1	1	1	255

NOTES

The maximum number of units allowed is 100 but the address of each unit can be a value between 1 and 255.

BUS TERMINATION – SWITCH SEL1

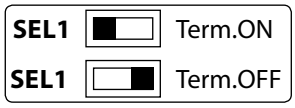

The factory preset for this switch is "Term.ON": termination enabled. In case of more units (intercoms, videophones or videomonitors) in a parallel connection (bus wires are connected to the terminals of the first unit then from this to the second and so on up to 4 units max) SEL1 must be set to "Term.ON" only for the last unit in the chain while on all other units must beset to "Term.OFF" (bus termination disabled).

USING WITH ART. 317 – JP1

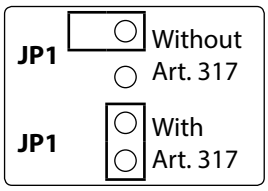

The factory preset for this jumper is open: Videophone not connected to the Art. 317. If the videophone is connected to an old Art. 317 video distribution box, this jumper must be closed.

INTERCOMMUNICATION MODE – SW3.1

SW3.1

This switch establishes the intercommunication mode: in OFF position (default) intercommunication is between units in the same apartment (same addresses but different extension); in ON position the intercommunication is between units in different apartments (different addresses).

On installations where there are more than one intercom/videophone in the same apartment and intercommunication between different apartments is required, only one intercom/videophone may be set with this function (SW3.1=ON, SW3.2=OFF, SW3.3=OFF). The other intercom/videophones in the apartment must be set for local intercommunication with extension addresses "2-4" (slaves). From the intercom/videophone set for intercommunication with other apartments it will be not possible to intercommunicate within the apartment but slave extensions 2-4 will be able to intercommunicate with each other.

EXTENSION NO – SW.2..3

SW3.2..3

If the intercommunication between apartments is enabled (switch 1 of SW3 = ON) leave these two switches in default position (both to OFF). Otherwise, if the intercommunication is between the same apartment (switch 1 of SW3 = OFF), set the extension addresses starting always from 1. During the external call, all video monitors in the same flat will ring but the video will be shown only from the videmononitor with extension address 1.

2	3	EXTENSION NO.
OFF	OFF	1 (default, master)
ON	OFF	2 (slave)
OFF	ON	3 (slave)
ON	ON	4 (slave)

SLAVE MODE - SW3.4

SW3.4

This set up concerns the answering mode of the video monitor when there is more than one unit (max 4) in the same apartment. OFF (default) = during a call, only the video monitor with extension 1 (master) will show the video. ON = the video monitor will be switched on independently of the extension address: in this case the video monitor must be supplied locally using a power supply Art. 2321 and connecting respectively BUS+ to terminal 14 and BUS- to terminal 11 of the pcb connection board provided with the Art. 5980 (the local power supply is required for each black & white slave videophone or starting from the third slave videophone when are used all colour videophones).

If you set ON this switch for one slave videophone, you must set ON the same switch also for the relevant master videophone.

VIDEOMONITOR CONNECTION BOARD ART. 5980

SIGNALS ON CONNECTION TERMINALS

Terminal	Signal	Description
1	GND	Ground
2	BUS1	Bus input
3	S1	Terminal controlled by the S_1 button, connects terminals 3 and 5 until is pressed
4	BUS2	Bus input
5	S1	Terminal controlled by the S_1 button, connects terminals 3 and 5 until is pressed
6	LED	Auxiliary LED power supply input (12Vdc)
7	S2	Terminal controlled by the S_2 button, connects terminals 7 and 17 until is pressed
8	GND	Ground
9	GND	Ground
10	LB	Local bell input (active low)
11	GND	Ground
12		
13		
14	+VAUX	Auxiliary power supply input (to be used when the switch 4 of SW3 is set to ON)
15		
16		
17	S2	Terminal controlled by the S_2 button, connects terminals 7 and 17 until is pressed
18	AL	Alarm input (not implemented yet)
19		
20		

SPECIFICATION

Housing/Mounting: 5000 Series Videophones / mounting plate plus connection board
Push buttons: Yes, 6
Programming: Yes, carried out by the buttons and the dip-switches located on the rear of the videophone
Controls: Loudspeaker and call tone volume, brightness and hue
Power Supply: Supplied by the BUS line
Power consumption: Stand-by: 0.2mA
Operating: 210mA
Working Temperature: -10 +50 °C

5000 Series Videomonitor wall mounting instructions

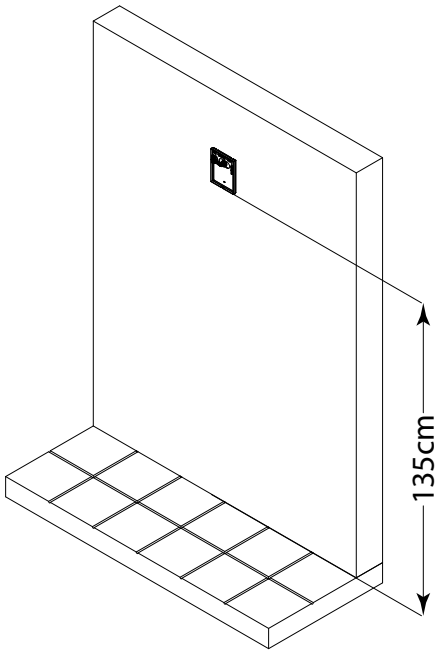

Fig. 1

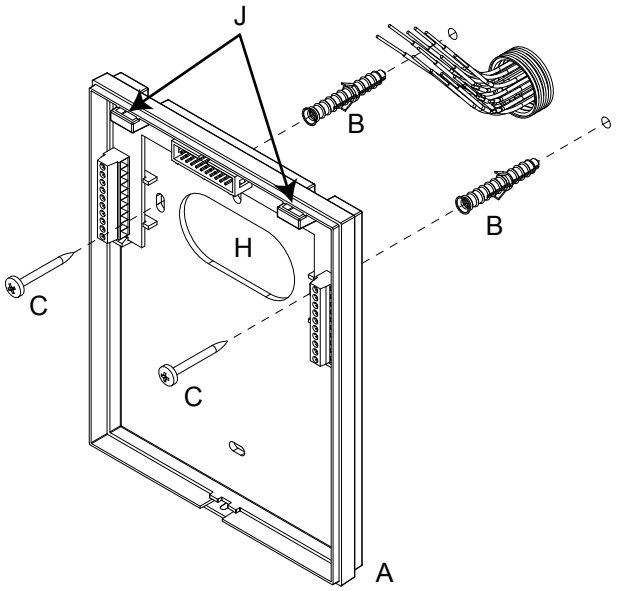

Fig. 2

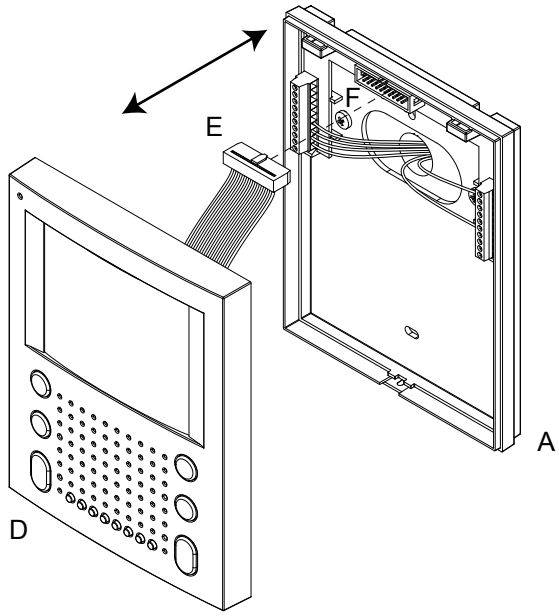

Fig. 3

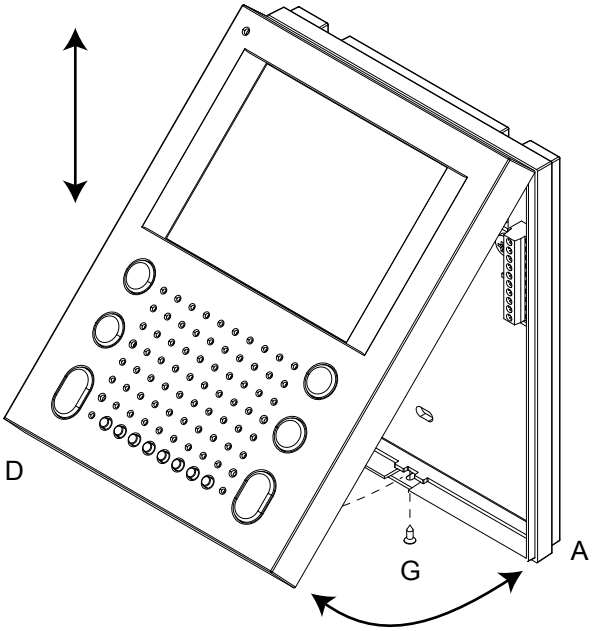

Fig. 4

1. To install Art.SL5456 it is necessary to open it. Follow picture **Fig. 4**: turn screw **"G"**, pull cover **"D"** and lift it up (or push it forward if the videomonitor is in horizontal position), then disconnect plug **"E" (Fig. 3)** from plug **"F"** on the connection board housed on the bottom **"A".**
2. Leaving approximately 135cm from the finished floor, fit the bottom **"A"** against the wall and mark the fixing holes considering that the cables must fed through the opening **"H" (Fig. 2).**
3. Make the holes, and fix bottom **"A"** on the wall using the two wall plugs **"B"** and the two screws **"C"** as shown in **Fig. 2**.
4. Make all connections as per provided diagram.
5. As shown in **Fig. 3**, move cover **"D"** close to bottom **"A"**, connect plug **"E"** to plug **"F"** on the connection board then proceed with the next step.
6. Hook cover **"D"** to bottom **"A"** by using the two clips **"J" (Fig. 2)** as shown in **Fig. 4** then push down cover **"D"** towards bottom **"A".** Then proceed with system testing.
7. When finished the testing, fix cover **"D"** at the bottom **"A"** using the screw **"G" (Fig. 4).**

Art. 6286 3.5" colour display videophone

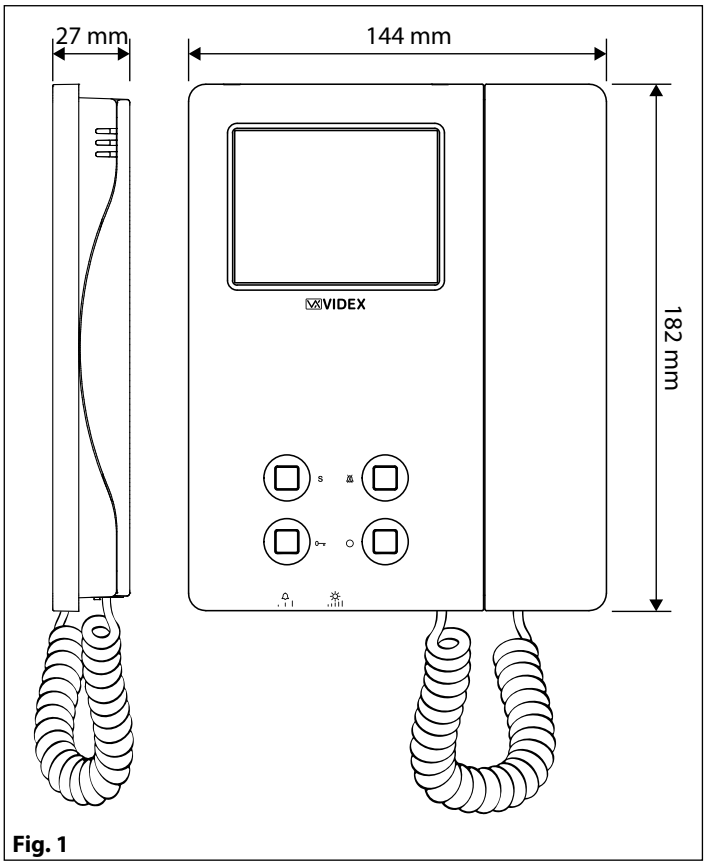

Fig. 1

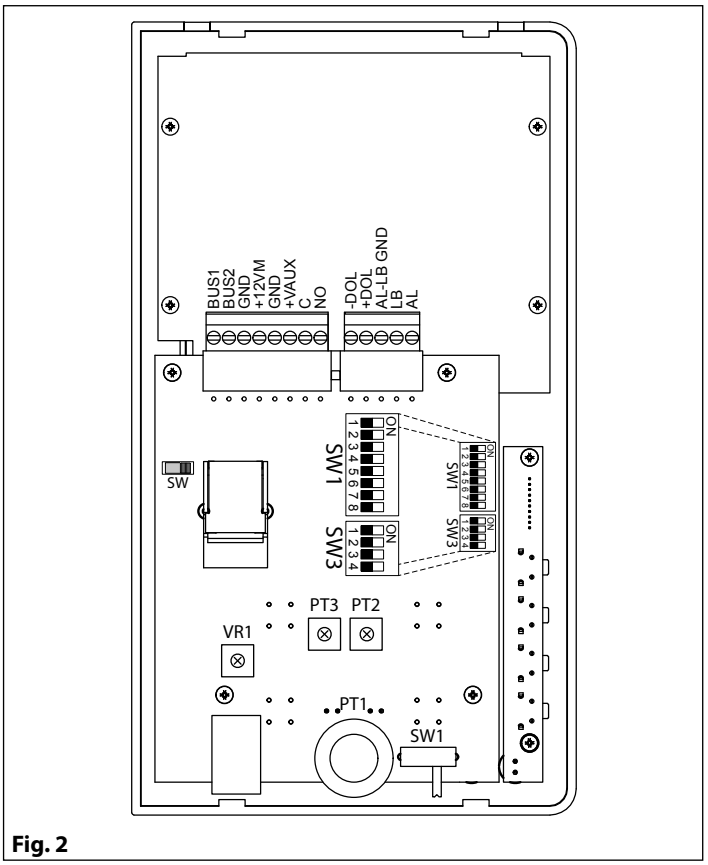

Fig. 2

DESCRIPTION

An intelligent Videophone using 3.5" full colour active matrix LCD monitor for VX2300. Including 4 buttons "service", "privacy/bus relay activation", "door- open/intercommunicating call" and "camera recall" plus 3 LED's for visual indication of all functions. Adjustments & programmable options: call tone volume on 3 levels (low, medium, high), picture hue, brightness and contrast, call tone melody, number of rings, privacy duration and address. Also includes a local bell function. The Art. 6286 is surface mount.

PUSH BUTTONS, LEDS AND CONTROLS (FIG. 1)	
S	**Service push button.** When pressed it links internally the terminals "C" and "NO" on the connection terminals.
	Privacy ON-OFF push button. To enable the function press this button when the videophone is in stand-by. The service is automatically disabled when the programmed time expires (the privacy duration time can be programmed) or manually by pressing again the button.
	Activate bus relay board Art. 2305 push button. To activate a bus relay, during a conversation, press this button quickly as many times as the address value of the relay.
	Door open push button. Press this button to open the door when you are in conversation.
	Intercommunication push button. For an intercommunicating call, pick up the handset and press as many times as the extension or address value to call (see SW3 Intercommunication Settings).
	Camera recall push button. Pick up the handset and press as many times as the DEVICE N. of the door station to switch on.
	Camera switch push button. If the door station uses the Art. 4303N plus the Art. 4330N, pressing this button during a conversation switches the video signal coming from the camera module to the video signal coming from the caMera module input for external camera. During the conversation, press and keep pressed the button until the camera switches. Repeat the operation to switch back to main camera.

PUSH BUTTONS, LEDS AND CONTROLS (FIG. 1)	
LED	**Privacy on LED.** It illuminates when the privacy service is enabled.
LED	**Generic use LED.** It is controlled from the terminals "+DOL" and "-DOL". Normally used to signal the door status (open or closed).
LED	**On LED.** It illuminates when the videophone is switched ON.
- SW1	Call tone volume control (3 levels).
- PT1	Brightness control (sliding wheel).
PT2	Colour intensity control trimmer (rotate left to increase or right to decrease).
PT3	Contrast control trimmer (rotate left to increase or right to decrease).
VR1	Microphone volume control trimmer (rotate left to increase or right to decrease).
SW	Bus termination switch (Right position = BUS termination active, Left position = BUS termination disabled)

PROGRAMMING

The videophone setup consists of the following settings:

- Number of Rings;
- Melody selection;
- Privacy duration;
- Unit address (1..127, switches 1 to 7 of SW1);
- Bus Termination (open or close, switch SW);
- Intercommunication mode (between apartments or within apartment, switch 1 of SW3);
- Extension address (1..4, switches 2,3 of SW3);
- Slave mode (switch 4 of SW3).

The programming of the number of rings, melody and privacy duration are carried out through the videophone push buttons, all other settings are carried out on the two dip-switch banks (SW1 and SW3) on the rear side of the video monitor (all the settings can be done without opening the videophone).

It is necessary to remove temporary the power supply after making any programming changes.

NUMBER OF RINGS, MELODY SELECTION AND PRIVACY DURATION

To make these changes, it is necessary to pick up the handset first when the system is in stand-by.

NUMBER OF RINGS

- Keep pressed the button until the two LEDs and switch on.
- Press the button for the number of times corresponding to the required number of rings to set. A beep confirms each time the button is pressed.
- Once the required number of rings is reached, wait approx 5 seconds for the two LED's to switch off. The new value is stored.

MELODY SELECTION

- Keep pressed the button until the two LEDs and switch on. The unit emits the current selected melody.
- Press the button and keep it pressed to listen the next melody. Repeat the operation until the required melody is found.
- Once the required melody is found, wait approx 5 seconds for the two LED's to switch off. The new melody is set.

PRIVACY DURATION

- Keep pressed the button until the two LEDs and are switched on.
- Press the button for the number of times corresponding to the required privacy duration to set. Each time the button is pressed, the duration is increased by 15 minutes: i.e. to set 2 hours, press the button 8 times.
- Once the required privacy time is reached, wait approx 5 seconds for the two LED's to switch off. The new duration is set.

VIDEOPHONE ADDRESS – SW1.1..7

SW1.1..7

The table below shows how to set the address of the videophone. Considering that ON = 1 and OFF = 0, multiply each digit for the relevant decimal weight then sum values obtained to get the address: E.g. as highlighted in the table OFF,ON,OFF,OFF,ON, OFF,ON in binary is equal to 0100101 then multiplying each digit for the relevant decimal weight you obtain the address that is 37.

SWITCHES STATUS							BINARY CODE - DECIMAL WEIGHT							ADDRESS
7	**6**	**5**	**4**	**3**	**2**	**1**	**64**	**32**	**16**	**8**	**4**	**2**	**1**	
OFF	OFF	OFF	OFF	OFF	OFF	ON	0	0	0	0	0	0	1	1
OFF	OFF	OFF	OFF	OFF	ON	OFF	0	0	0	0	0	1	0	2
OFF	OFF	OFF	OFF	OFF	ON	ON	0	0	0	0	0	1	1	3
OFF	OFF	OFF	OFF	ON	OFF	OFF	0	0	0	0	1	0	0	4
OFF	ON	OFF	OFF	ON	OFF	ON	0	1	0	0	1	0	1	37
ON	ON	ON	ON	ON	ON	ON	1	1	1	1	1	1	1	127

Note
The maximum number of units allowed is 100 but the address of each unit can be a value between 1 and 127.

VIDEOPHONE END OF LINE TERMIANTION – SWCH1

Looking at the videophone from the rear:

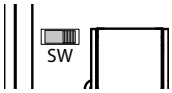

Move the switch to the right position to enable the bus termination

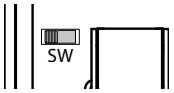

Move the switch to the left position to disable the bus termination

In case of more units (intercoms, videophones or video monitors) in a parallel connection (bus wires are connected to the terminals of the first unit then from this to the second and so on up to 4 units max) the BUS termination must be enabled only for the last unit in the chain while on all other units it must be set to disabled.

INTERCOMMUNICATION MODE – SW3.1

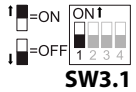

SW3.1

This switch establishes the intercommunication mode: in OFF position (default) intercommunication is between units in the same apartment (same addresses but different extension); in ON position the intercommunication is between units in different apartments (different addresses).

On installations where there are more than one intercom/videophone in the same apartment and intercommunication between different apartments is required, only one intercom/videophone may be set with this function (SW3.1=ON, SW3.2=OFF, SW3.3=OFF). The other intercom/videophones in the apartment must be set for local intercommunication with extension addresses "2-4" (slaves). From the intercom/videophone set for intercommunication with other apartments it will not be possible to intercommunicate within the apartment but slave extensions 2-4 will be able to intercommunicate with each other within the apartment.

EXTENSION NO – SW.2..3

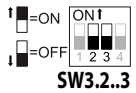

SW3.2..3

If the intercommunication between apartments is enabled (switch 1 of SW3 = ON) leave these two switches in default position (both to OFF). Otherwise, if the intercommunication is between the same apartment (switch 1 of SW3 = OFF), set the extension addresses starting always from 1. During the external call, all video monitors in the same flat will ring but the video will be shown only from the videophone with extension address 1.

2	3	EXTENSION NO.
OFF	OFF	1 (default, master)
ON	OFF	2 (slave)
OFF	ON	3 (slave)
ON	ON	4 (slave)

SLAVE MODE - SW3.4

SW3.4

This set up concerns the answering mode of the video monitor when there is more than one unit (max 4) in the same apartment. OFF (default) = during a call, only the video monitor with extension 1 (master) will show the video. ON = the video monitor will be switched on independently of the extension address: in this case the video monitor must be supplied locally using a power supply Art.2321 and connecting respectively BUS+ to terminal +VAUX and BUS- to terminal GND on the connection terminals (the local power supply is required for each black & white slave videophone or starting from the third slave videophone when they are all colour videophones).

If you set for one slave videophone, you must set ON the same switch also for the relevant master videophone.

SIGNALS ON CONNECTION TERMINALS	
BUS1	Bus input
BUS2	Bus input
GND	Ground
+12VM	+12Vdc power supply input for version with memory board option
GND	Ground
+VAUX	Auxiliary power supply input (to be used when the switch 4 of SW3 is set to ON)
C	Dry contact Max 50Vdc @ 100mA. Internally linked to NO when the S button is pressed. **Max 35Vdc, 10mA**
NO	Dry contact Max 50Vdc @ 100mA. Internally linked to C when the S button is pressed. **Max 35Vdc, 10mA**
–DOL	Auxiliary LED power supply input (ground)
+DOL	Auxiliary LED power supply input (+12Vdc)
AL-LB_GND	Ground output for use in combination with "AL" & "LB" active low inputs
LB	Local bell input (active low)
AL	Alarm input (not implemented yet)

SPECIFICATION

Housing/Mounting: 6200 Series Videophones / surface mount
Push buttons: Yes, 4
Programming: Yes, carried out by the buttons and the dip-switches located on the rear of the videophone
Controls: Call tone volume, brightness and hue
Power Supply: Supplied by the BUS line
Power consumption: Stand-by: 0.2mA
Operating: 115mA
Working Temperature: -10 +50 °C

6200 Series Videophone wall mounting instructions

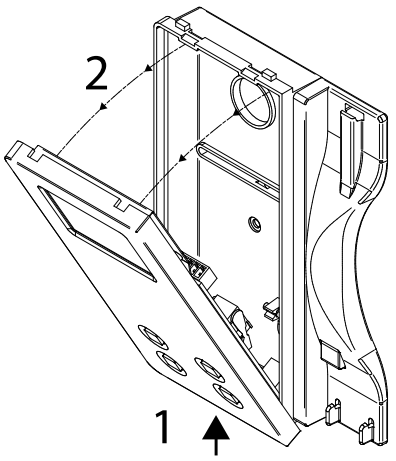

Fig. 1

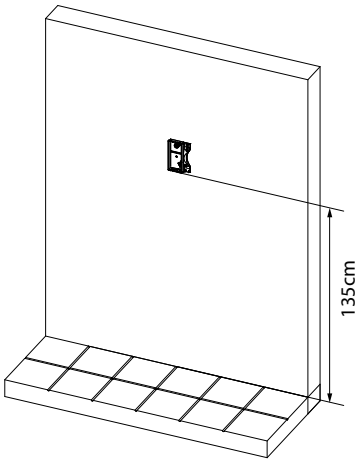

Fig. 2

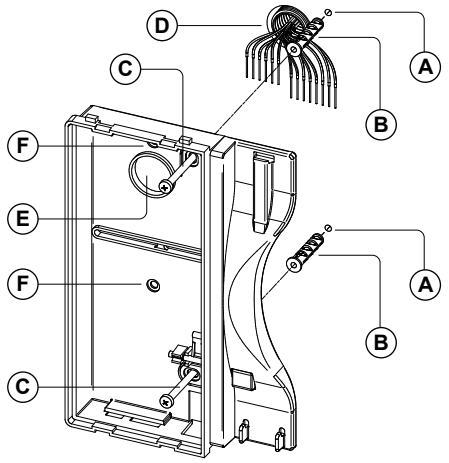

Fig. 3

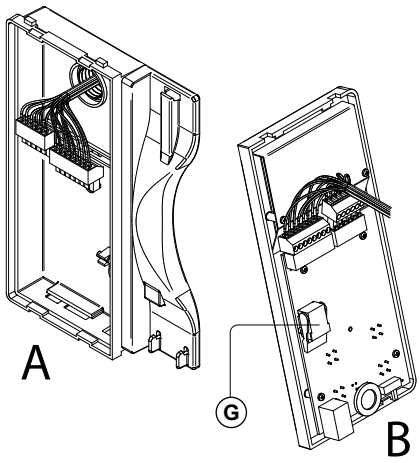

Fig. 4

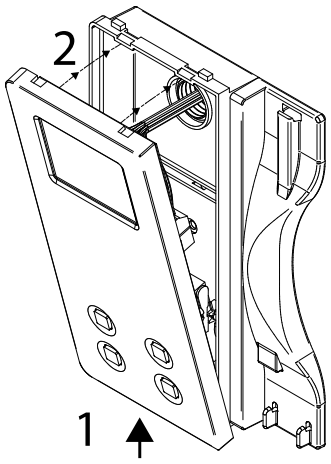

Fig. 5

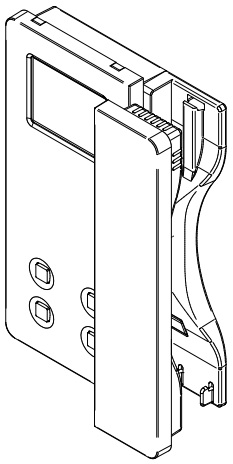

Fig. 6

1. In order to install the videophone, it is necessary to remove the cover, which contains all the electronics, from the base: firstly disconnect the handset from the videophone (by removing its plug from the videophone), then press lightly the bottom part of the videophone and simultaneously pulling outwards the upper part as shown in **Fig. 1**.
2. Put the base of the unit on the wall at approx 135cm from the finished floor to mark the points for the fixing holes **"A"** (**Fig. 2**) remembering that the wires **"D"** (**Fig. 3**) must be fed through the hole **"E"** (**Fig. 3**). If you use the flush mounting box 503, embed it into the wall vertically at approx. 140cm from the finished floor and the base.
3. Following **Fig. 3**, make the holes **"A"**, insert the wall plugs **"B"** and fix the base with the screws **"C"** feeding the wires **"D"** into the hole **"E"**. If you have used the box 503, fix the base to the wall through the holes **"F"** using the screws **"C"**.
4. As shown in **Fig. 4A**, connect the wires to the removable terminals following the provided installation diagram. Connect the terminal blocks to the electronics contained in the cover as shown in **Fig. 4B**. Reinsert the handset and test system before closing. **Note: Contrast and hue trimmers can be adjusted only if the videophone is open. Note while testing the system, it is advisable to hold the cover with your hand closing manually the hook switch of the handset (see Fig. 4B reference "G").**
5. Once testing is complete and all the necessary adjustments are made, disconnect the handset from the cover and close the unit as shown in **Fig. 5**: first hook it on the bottom then push in the top until you hear the clip.
6. Reconnect the handset and hang it as shown in **Fig. 6**.

Art. 6388 3.5" hands free colour display digital videophone

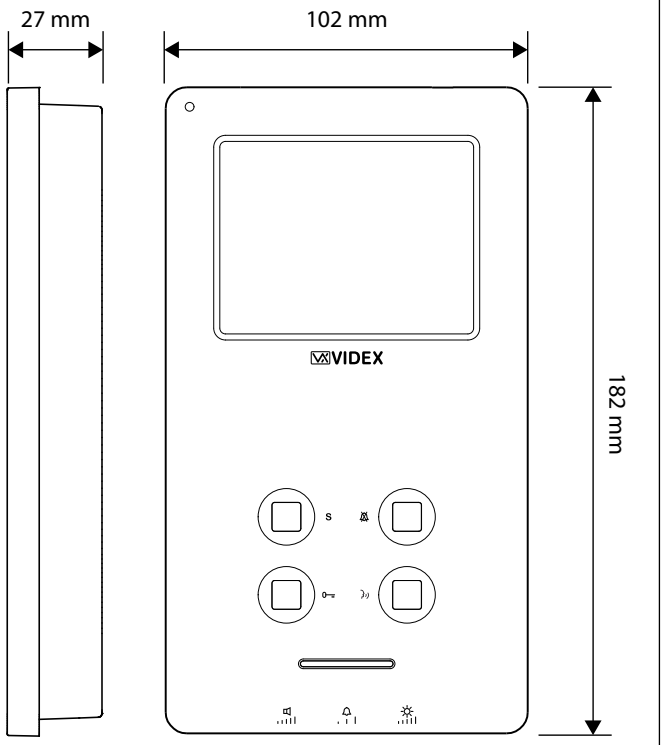

Fig. 1

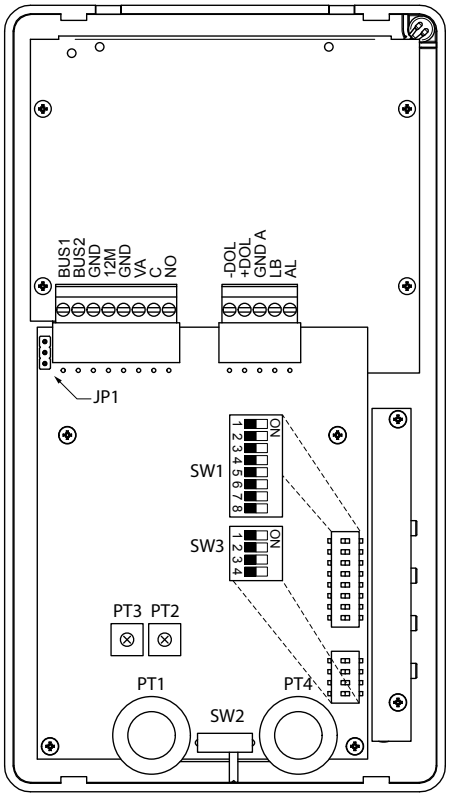

Fig. 2

DESCRIPTION

An intelligent hands free videophone using 3.5" full colour active matrix LCD monitor for VX2300.
Including 4 buttons "service", "privacy/bus relay activation", "door-open/intercommunicating call" and "answer/camera recall" plus 3 LED's for visual indication of all functions.
Adjustments & programmable options: call tone volume on 3 levels (low, medium, high), picture hue, brightness and contrast, call tone melody, number of rings, privacy duration and address. Also includes a local bell function. The Art. 6388 is surface mount.

PUSH BUTTONS (FIG. 1)	
S	**Service push button.** When pressed it links internally the terminals "C" and "NO" on the connection terminals.
	Privacy ON-OFF push button. To enable the function press this button when the videophone is in stand-by. The service is automatically disabled when the programmed time expires (the privacy duration time can be programmed) or manually by pressing again the button.
	Activate bus relay board Art. 2305 push button. To activate a bus relay, during a conversation, press this button quickly as many times as the address value of the relay.
	Camera switch push button. If the door station uses the Art. 4303N plus the Art. 4330N, pressing this button during a conversation switches the video signal coming from the camera module to the video signal coming from the camera module input for external camera. During the conversation, press and keep pressed the button until the camera switches. Repeat the operation to switch back to main camera.
	Call Reject Button. During an incoming call, press this button to reject the call. The visitor doesn't receive any warning of the call rejected.
	Door open push button. Press this button to open the door when you are in conversation or you are receiving a call.
	Intercommunication push button. For an intercommunicating call, pick up the handset and press as many times as the extension or address value to call (see SW3 Intercommunication Settings).

PUSH BUTTONS (FIG. 1)	
	Answerpush button. On an incoming call, operation of this button allows the user to answer and converse with the visitor. The relevant LED will illuminate.
	Switch off button. With the system switched on (monitor on), momentary operation of the button will switch the video monitor off. The videomonitor will also automatically switch off after a time delay if the button is not pressed. The relevant LED will switch off.
	Camera Recall push button. Pick up the handset and press as many times as the DEVICE N. of the door station to switch on.

LEDS (FIG. 1)	
LED	**Privacy on LED.** It illuminates when the privacy service is enabled.
LED	**Generic use LED.** It is controlled from the terminals "+DOL" and "-DOL". Normally used to signal the door status (open or closed).
LED	**ON LED.** It illuminates when the videophone is switched ON.

CONTROLS (FIG. 1 AND FIG. 2)	
PT4	Speech volume control (sliding wheel).
SW2	Call tone volume control (3 levels).
PT1	Brightness control (sliding wheel).
PT2	Colour intensity control trimmer (rotate left to increase or right to decrease).
PT3	Contrast control trimmer (rotate left to increase or right to decrease).
JP1	Bus termination switch (lower position = BUS termination active, upper position = BUS termination disabled).

PROGRAMMING

The videophone setup consists of the following settings:

- Number of rings;
- Melody selection;
- Privacy duration;
- Unit address (1..127, switches 1 to 7 of SW1);
- Bus Termination (open or close, jumper JP1);
- Intercommunication mode (between apartments or within apartment, switch 1 of SW3);
- Extension address (1..4, switches 2,3 of SW3);
- Slave mode (switch 4 of SW3).

The programming of the number of rings, melody and privacy duration are carried out through the videophone push buttons, all other settings are carried out on the two dip-switch banks (SW1 and SW3) on the rear side of the video monitor (all the settings can be done without opening the videophone).

It is necessary to remove temporary the power supply after making any programming changes.

NUMBER OF RINGS, MELODY SELECTION AND PRIVACY DURATION

To make these changes, it is necessary to pick up the handset first when the system is in stand-by.

NUMBER OF RINGS.

- Keep pressed the button until the two LEDs and switch on.
- Press the button for the number of times corresponding to the required number of rings to set. A beep confirms each time the button is pressed.
- Once the required number of rings is reached, wait approx 5 seconds for the two LED's to switch off. The new value is stored.

MELODY SELECTION

- Keep pressed the button until the two LEDs and switch on. The unit emits the current selected melody.
- Press the button and keep it pressed to listen the next melody. Repeat the operation until the required melody is found.
- Once the required melody is found, wait approx 5 seconds for the two LED's to switch off. The new melody is set.

PRIVACY DURATION

- Keep pressed the button until the two LEDs and are switched on.
- Press the button for the number of times corresponding to the required privacy duration to set. Each time the button is pressed, the duration is increased by 15 minutes: i.e. to set 2 hours, press the button 8 times.
- Once the required privacy time is reached, wait approx 5 seconds for the two LED's to switch off. The new duration is set.

VIDEOPHONE ADDRESS – SW1.1..7

SW1.1..7

The table below shows how to set the address of the videophone. Considering that ON = 1 and OFF = 0, multiply each digit for the relevant decimal weight then sum values obtained to get the address: E.g. as highlighted in the table OFF,ON,OFF,OFF,ON, OFF,ON in binary is equal to 0100101 then multiplying each digit for the relevant decimal weight you obtain the address that is 37.

SWITCHES STATUS							BINARY CODE - DECIMAL WEIGHT							ADDRESS
7	**6**	**5**	**4**	**3**	**2**	**1**	**64**	**32**	**16**	**8**	**4**	**2**	**1**	
OFF	OFF	OFF	OFF	OFF	OFF	ON	0	0	0	0	0	0	1	1
OFF	OFF	OFF	OFF	OFF	ON	OFF	0	0	0	0	0	1	0	2
OFF	OFF	OFF	OFF	OFF	ON	ON	0	0	0	0	0	1	1	3
OFF	OFF	OFF	OFF	ON	OFF	OFF	0	0	0	0	1	0	0	4
OFF	ON	OFF	OFF	ON	OFF	ON	0	1	0	0	1	0	1	37
ON	ON	ON	ON	ON	ON	ON	1	1	1	1	1	1	1	127

Note: The maximum number of units allowed is 100 but the address of each unit can be a value between 1 and 127.

VIDEOPHONE END OF LINE TERMIANTION –JP1

Looking at the videophone from the rear:

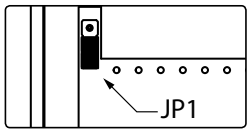

Move the jumper **JP1** to the lower position to enable the bus termination.

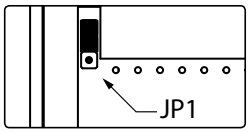

Move the jumper **JP1** to the upper position to disable the bus termination.

In case of more units (intercoms, videophones or video monitors) in a parallel connection (bus wires are connected to the terminals of the first unit then from this to the second and so on up to 4 units max) the BUS termination must be enabled only for the last unit in the chain while on all other units it must be set to disabled.

INTERCOMMUNICATION MODE – SW3.1

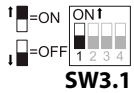

SW3.1

This switch establishes the intercommunication mode: in OFF position (default) intercommunication is between units in the same apartment (same addresses but different extension); in ON position the intercommunication is between units in different apartments (different addresses).

On installations where there are more than one intercom/videophone in the same apartment and intercommunication between different apartments is required, only one intercom/videophone may be set with this function (SW3.1=ON, SW3.2=OFF, SW3.3=OFF). The other intercom/videophones in the apartment must be set for local intercommunication with extension addresses "2-4" (slaves). From the intercom/videophone set for intercommunication with other apartments it will not be possible to intercommunicate within the apartment but slave extensions 2-4 will be able to intercommunicate with each other within the apartment.

EXTENSION NO – SW.2..3

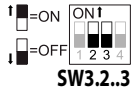

SW3.2..3

If the intercommunication between apartments is enabled (switch 1 of SW3 = ON) leave these two switches in default position (both to OFF). Otherwise, if the intercommunication is between the same apartment (switch 1 of SW3 = OFF), set the extension addresses starting always from 1. During the external call, all video monitors in the same flat will ring but the video will be shown only from the videophone with extension address 1.

2	3	EXTENSION NO.
OFF	OFF	1 (default, master)
ON	OFF	2 (slave)
OFF	ON	3 (slave)
ON	ON	4 (slave)

SLAVE MODE - SW3.4

SW3.4

This set up concerns the answering mode of the video monitor when there is more than one unit (max 4) in the same apartment. OFF (default) = during a call, only the video monitor with extension 1 (master) will show the video. ON = the video monitor will be switched on independently of the extension address: in this case the video monitor must be supplied locally using a power supply Art. 2321 and connecting respectively BUS+ to terminal +VAUX and BUS- to terminal GND on the connection terminals (the local power supply is required for each black & white slave videophone or starting from the third slave videophone when they are all colour videophones).

If you set for one slave videophone, you must set ON the same switch also for the relevant master videophone.

SIGNALS ON CONNECTION TERMINALS		
Signal	**Description**	
BUS1	Bus input	
BUS2	Bus input	
GND	Ground	
12M	+12Vdc power supply input for version with Memory Board option	
GND	Ground	
VA	Auxiliary power supply input (to be used when the switch 4 of SW3 is set to ON)	
C	Dry contact Max 50Vdc @ 100mA. Internally linked to NO when the S button is pressed.	**Max 35Vdc, 10mA**
NO	Dry contact Max 50Vdc @ 100mA. Internally linked to C when the S button is pressed.	
–DOL	Auxiliary LED power supply input (ground)	
+DOL	Auxiliary LED power supply input (+12Vdc)	
GND A	Ground output for use in combination with "AL" & "LB" active low inputs	
LB	Local bell input (active low)	
AL	Alarm input (not implemented yet)	

TECHNICAL SPECIFICATION

Housing/Mounting: 6300 Series Videophones / surface mount
Push buttons: Yes, 4
Programming: Yes, carried out by the buttons and the dip-switches located on the rear of the videophone
Controls: Call tone volume, picture hue, brightness and contrast
Power Supply: Supplied by the BUS line
Power consumption: Stand-by: 0.2mA
Operating: 115mA
Working Temperature: -10 +50 °C

6300 Series Wall mounting instructions

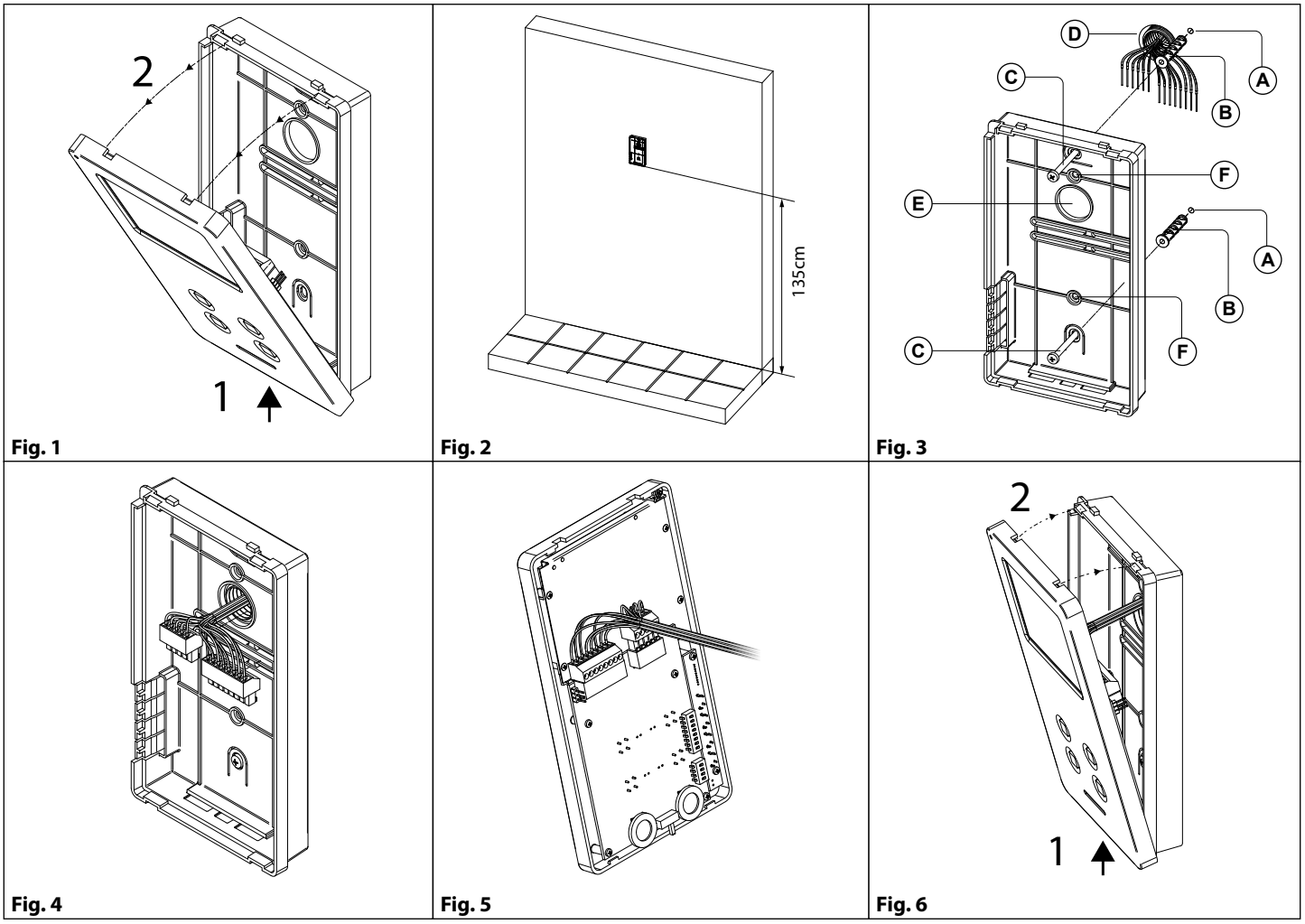

Fig. 1 **Fig. 2** **Fig. 3**

Fig. 4 **Fig. 5** **Fig. 6**

1. In order to install the videophone, it is necessary to remove the cover, which contains all the electronics, from the base: press lightly on the bottom part of the videophone and simultaneously pulling outwards the upper part as shown in **Fig. 1**.
2. Put the base of the unit on the wall at approx 135cm from the finished floor to match the points for the fixing holes **"A"** (**Fig. 2**) remembering that the wires **"D"** (**Fig. 3**) must be fed through the large hole **"E"** (**Fig. 3**). If you use the flush mounting box 503, embed it into the wall vertically at approx. 140cm from the finished floor and the base.
3. Following **Fig. 3**, make the holes **"A"**, insert the wall plugs **"B"** and fix the base with the screws **"C"** feeding the wires **"D"** through the hole **"E"**. If you have used the box 503, fix the base to the wall through the holes **"F"** using the screws **"C"**.
4. As shown in **Fig. 4**, connect the wires to the removable terminals following the provided installation diagram. Connect the terminal blocks to the electronics contained in the cover as shown in **Fig. 5**. Test system before closing.
   Contrast and hue trimmers can be adjusted only if the videophone is open. To activate the display and see changes use the "Camera Recall" function by pressing button**.**
   Note: while testing the system, it is advisable to hold the cover with your hand.
5. Once testing is complete and all the necessary adjustments are made, close the unit as shown in **Fig. 6**: first hook in the bottom and the then the top until you hear a click.

Art. 6488 4.3" hands free colour display digital videophone

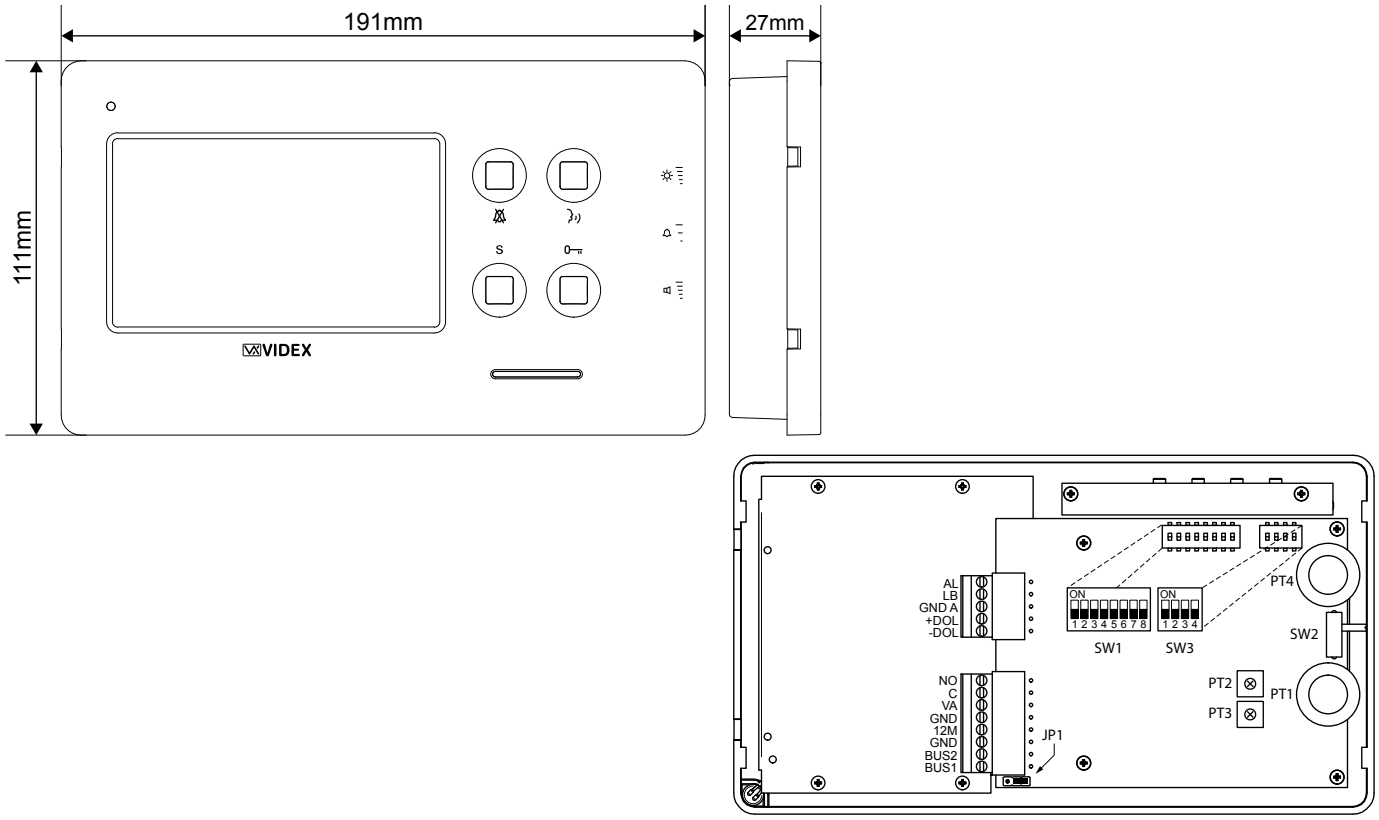

Fig. 1

DESCRIPTION

An intelligent hands free videophone using 4.3" full colour active matrix LCD monitor for VX2300.
Including 4 buttons "service", "privacy/bus relay activation", "door-open/intercommunicating call" and "answer/camera recall" plus 3 LED's for visual indication of all functions.
Adjustments & programmable options: call tone volume on 3 levels (low, medium, high), picture hue, brightness and contrast, call tone melody, number of rings, privacy duration and address. Also includes a local bell function. The Art. 6488 is surface mount.

PUSH BUTTONS (FIG. 1)	
S	**Service push button.** When pressed it links internally the terminals "C" and "NO" on the connection terminals.
	Privacy ON-OFF push button. To enable the function press this button when the videophone is in stand-by. The service is automatically disabled when the programmed time expires (the privacy duration time can be programmed) or manually by pressing again the button.
	Activate bus relay board Art. 2305 push button. To activate a bus relay, during a conversation, press this button quickly as many times as the address value of the relay.
	Camera switch push button. If the door station uses the Art. 4303N plus the Art. 4330N, pressing this button during a conversation switches the video signal coming from the camera module to the video signal coming from the camera module input for external camera. During the conversation, press and keep pressed the button until the camera switches. Repeat the operation to switch back to main camera.
	Call Reject Button. During an incoming call, press this button to reject the call. The visitor doesn't receive any warning of the call rejected.
	Door open push button. Press this button to open the door when you are in conversation or you are receiving a call.
	Intercommunication push button. For an intercommunicating call, pick up the handset and press as many times as the extension or address value to call (see SW3 Intercommunication Settings).

PUSH BUTTONS (FIG. 1)	
	Answerpush button. On an incoming call, operation of this button allows the user to answer and converse with the visitor. The relevant LED will illuminate.
	Switch off button. With the system switched on (monitor on), momentary operation of the button will switch the video monitor off. The videomonitor will also automatically switch off after a time delay if the button is not pressed. The relevant LED will switch off.
	Camera Recall push button. Pick up the handset and press as many times as the DEVICE N. of the door station to switch on.

LEDS (FIG. 1)	
LED	**Privacy on LED.** It illuminates when the privacy service is enabled.
LED	**Generic use LED.** It is controlled from the terminals "+DOL" and "-DOL". Normally used to signal the door status (open or closed).
LED	**ON LED.** It illuminates when the videophone is switched ON.

CONTROLS (FIG. 1)	
PT4	Speech volume control (sliding wheel).
SW2	Call tone volume control (3 levels).
PT1	Brightness control (sliding wheel).
PT2	Colour intensity control trimmer (rotate left to increase or right to decrease).
PT3	Contrast control trimmer (rotate left to increase or right to decrease).
JP1	Bus termination switch (lower position = BUS termination active, upper position = BUS termination disabled).

PROGRAMMING

The videophone setup consists of the following settings:

- Number of rings;
- Melody selection;
- Privacy duration;
- Unit address (1..127, switches 1 to 7 of SW1);
- Bus Termination (open or close, jumper JP1);
- Intercommunication mode (between apartments or within apartment, switch 1 of SW3);
- Extension address (1..4, switches 2,3 of SW3);
- Slave mode (switch 4 of SW3).

The programming of the number of rings, melody and privacy duration are carried out through the videophone push buttons, all other settings are carried out on the two dip-switch banks (SW1 and SW3) on the rear side of the video monitor (all the settings can be done without opening the videophone).

It is necessary to remove temporary the power supply after making any programming changes.

NUMBER OF RINGS, MELODY SELECTION AND PRIVACY DURATION

To make these changes, it is necessary to pick up the handset first when the system is in stand-by.

NUMBER OF RINGS.

- Keep pressed the button until the two LEDs and switch on.
- Press the button for the number of times corresponding to the required number of rings to set. A beep confirms each time the button is pressed.
- Once the required number of rings is reached, wait approx 5 seconds for the two LED's to switch off. The new value is stored.

MELODY SELECTION

- Keep pressed the button until the two LEDs and switch on. The unit emits the current selected melody.
- Press the button and keep it pressed to listen the next melody. Repeat the operation until the required melody is found.
- Once the required melody is found, wait approx 5 seconds for the two LED's to switch off. The new melody is set.

PRIVACY DURATION

- Keep pressed the button until the two LEDs and are switched on.
- Press the button for the number of times corresponding to the required privacy duration to set. Each time the button is pressed, the duration is increased by 15 minutes: i.e. to set 2 hours, press the button 8 times.
- Once the required privacy time is reached, wait approx 5 seconds for the two LED's to switch off. The new duration is set.

VIDEOPHONE ADDRESS – SW1.1..7

SW1.1..7

The table below shows how to set the address of the videophone. Considering that ON = 1 and OFF = 0, multiply each digit for the relevant decimal weight then sum values obtained to get the address: E.g. as highlighted in the table OFF,ON,OFF,OFF,ON, OFF,ON in binary is equal to 0100101 then multiplying each digit for the relevant decimal weight you obtain the address that is 37.

SWITCHES STATUS							BINARY CODE - DECIMAL WEIGHT							ADDRESS
7	**6**	**5**	**4**	**3**	**2**	**1**	**64**	**32**	**16**	**8**	**4**	**2**	**1**	
OFF	OFF	OFF	OFF	OFF	OFF	ON	0	0	0	0	0	0	1	1
OFF	OFF	OFF	OFF	OFF	ON	OFF	0	0	0	0	0	1	0	2
OFF	OFF	OFF	OFF	OFF	ON	ON	0	0	0	0	0	1	1	3
OFF	OFF	OFF	OFF	ON	OFF	OFF	0	0	0	0	1	0	0	4
OFF	ON	OFF	OFF	ON	OFF	ON	0	1	0	0	1	0	1	37
ON	ON	ON	ON	ON	ON	ON	1	1	1	1	1	1	1	127

Note: The maximum number of units allowed is 100 but the address of each unit can be a value between 1 and 127.

VIDEOPHONE END OF LINE TERMIANTION –JP1

Looking at the videophone from the rear:

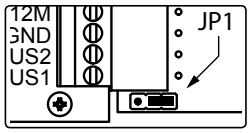

Move the jumper **JP1** to the right position to enable the bus termination.

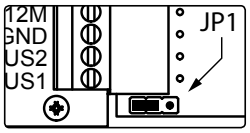

Move the jumper **JP1** to the left position to disable the bus termination.

In case of more units (intercoms, videophones or video monitors) in a parallel connection (bus wires are connected to the terminals of the first unit then from this to the second and so on up to 4 units max) the BUS termination must be enabled only for the last unit in the chain while on all other units it must be set to disabled.

INTERCOMMUNICATION MODE – SW3.1

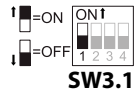

SW3.1

This switch establishes the intercommunication mode: in OFF position (default) intercommunication is between units in the same apartment (same addresses but different extension); in ON position the intercommunication is between units in different apartments (different addresses).

On installations where there are more than one intercom/videophone in the same apartment and intercommunication between different apartments is required, only one intercom/videophone may be set with this function (SW3.1=ON, SW3.2=OFF, SW3.3=OFF). The other intercom/videophones in the apartment must be set for local intercommunication with extension addresses "2-4" (slaves). From the intercom/videophone set for intercommunication with other apartments it will not be possible to intercommunicate within the apartment but slave extensions 2-4 will be able to intercommunicate with each other within the apartment.

EXTENSION NO – SW3.2..3

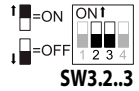

SW3.2..3

If the intercommunication between apartments is enabled (switch 1 of SW3 = ON) leave these two switches in default position (both to OFF). Otherwise, if the intercommunication is between the same apartment (switch 1 of SW3 = OFF), set the extension addresses starting always from 1. During the external call, all video monitors in the same flat will ring but the video will be shown only from the videophone with extension address 1.

2	3	EXTENSION NO.
OFF	OFF	1 (default, master)
ON	OFF	2 (slave)
OFF	ON	3 (slave)
ON	ON	4 (slave)

SLAVE MODE - SW3.4

SW3.4

This set up concerns the answering mode of the video monitor when there is more than one unit (max 4) in the same apartment. OFF (default) = during a call, only the video monitor with extension 1 (master) will show the video. ON = the video monitor will be switched on independently of the extension address: in this case the video monitor must be supplied locally using a power supply Art. 2321 and connecting respectively BUS+ to terminal +VAUX and BUS- to terminal GND on the connection terminals (the local power supply is required for each black & white slave videophone or starting from the third slave videophone when they are all colour videophones).

If you set for one slave videophone, you must set ON the same switch also for the relevant master videophone.

SIGNALS ON CONNECTION TERMINALS		
Signal	**Description**	
BUS1	Bus input	
BUS2	Bus input	
GND	Ground	
12M	+12Vdc power supply input for version with Memory Board option	
GND	Ground	
VA	Auxiliary power supply input (to be used when the switch 4 of SW3 is set to ON)	
C	Dry contact Max 50Vdc @ 100mA. Internally linked to NO when the S button is pressed.	**Max 35Vdc, 10mA**
NO	Dry contact Max 50Vdc @ 100mA. Internally linked to C when the S button is pressed.	
–DOL	Auxiliary LED power supply input (ground)	
+DOL	Auxiliary LED power supply input (+12Vdc)	
GND A	Ground output for use in combination with "AL" & "LB" active low inputs	
LB	Local bell input (active low)	
AL	Alarm input (not implemented yet)	

TECHNICAL SPECIFICATION

Housing/Mounting: 6400 Series Videophones / surface mount
Push buttons: Yes, 4
Programming: Yes, carried out by the buttons and the dip-switches located on the rear of the videophone
Controls: Call tone volume, picture hue, brightness and contrast
Power Supply: Supplied by the BUS line
Power consumption: Stand-by: 0.2mA
Operating: 115mA
Working Temperature: -10 +50 °C

6400 Series Wall mounting instructions

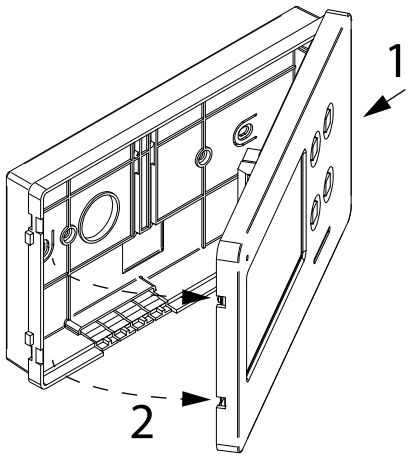

Fig. 1

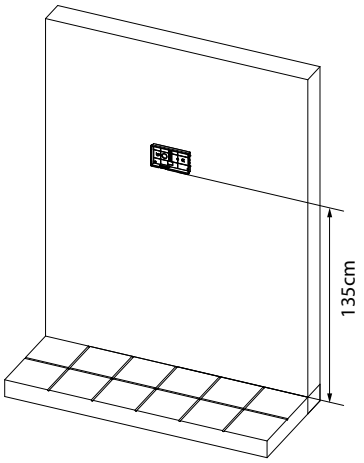

Fig. 2

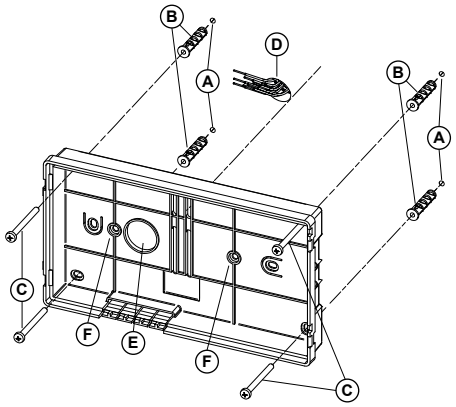

Fig. 3

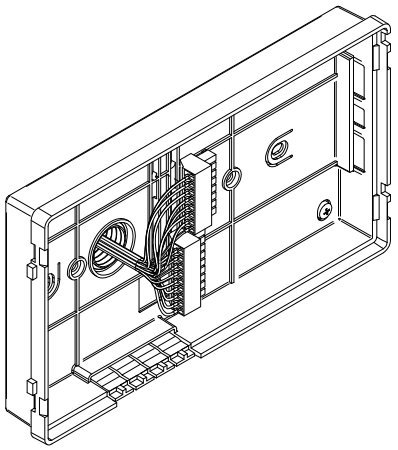

Fig. 4

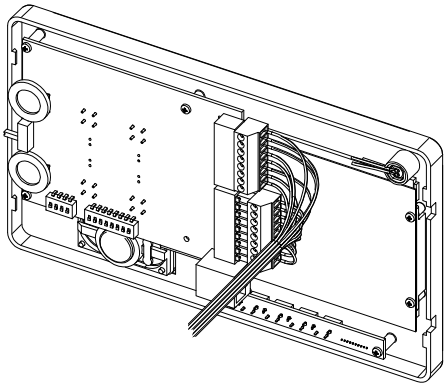

Fig. 5

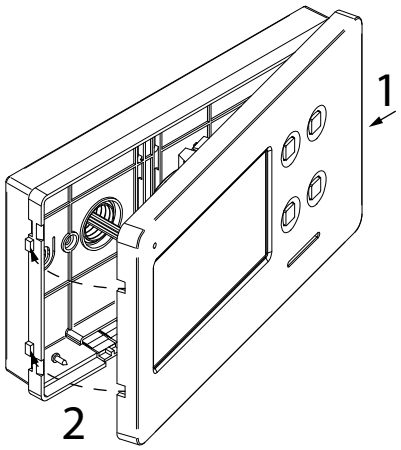

Fig. 6

1. In order to install the videophone, it is necessary to remove the cover, which contains all the electronics, from the base: press lightly on the right part of the videophone and simultaneously pulling outwards the left part as shown in **Fig. 1**.
2. Put the base of the unit on the wall at approx 135cm from the finished floor to match the points for the fixing holes **"A"** (**Fig. 2**) remembering that the wires **"D"** (**Fig. 3**) must be fed through the large hole **"E"** (**Fig. 3**). If you use the flush mounting box 503, embed it into the wall vertically at approx. 140cm from the finished floor and the base.
3. Following **Fig. 3**, make the holes **"A"**, insert the wall plugs **"B"** and fix the base with the screws **"C"** feeding the wires **"D"** through the hole **"E"**. If you have used the box 503, fix the base to the wall through the holes **"F"** using the screws **"C"**.
4. As shown in **Fig. 4**, connect the wires to the removable terminals following the provided installation diagram. Connect the terminal blocks to the electronics contained in the cover as shown in **Fig. 5**. Test system before closing.
   Contrast and hue trimmers can be adjusted only if the videophone is open. To activate the display and see changes use the "Camera Recall" function by pressing button**.**
   Note: while testing the system, it is advisable to hold the cover with your hand.
5. Once testing is complete and all the necessary adjustments are made, close the unit as shown in **Fig. 6**: first hook in the right part and then the left part until you hear a click.

Art. KRV88-KRV86 3.5" hands free videomonitor for VX2300 digital system

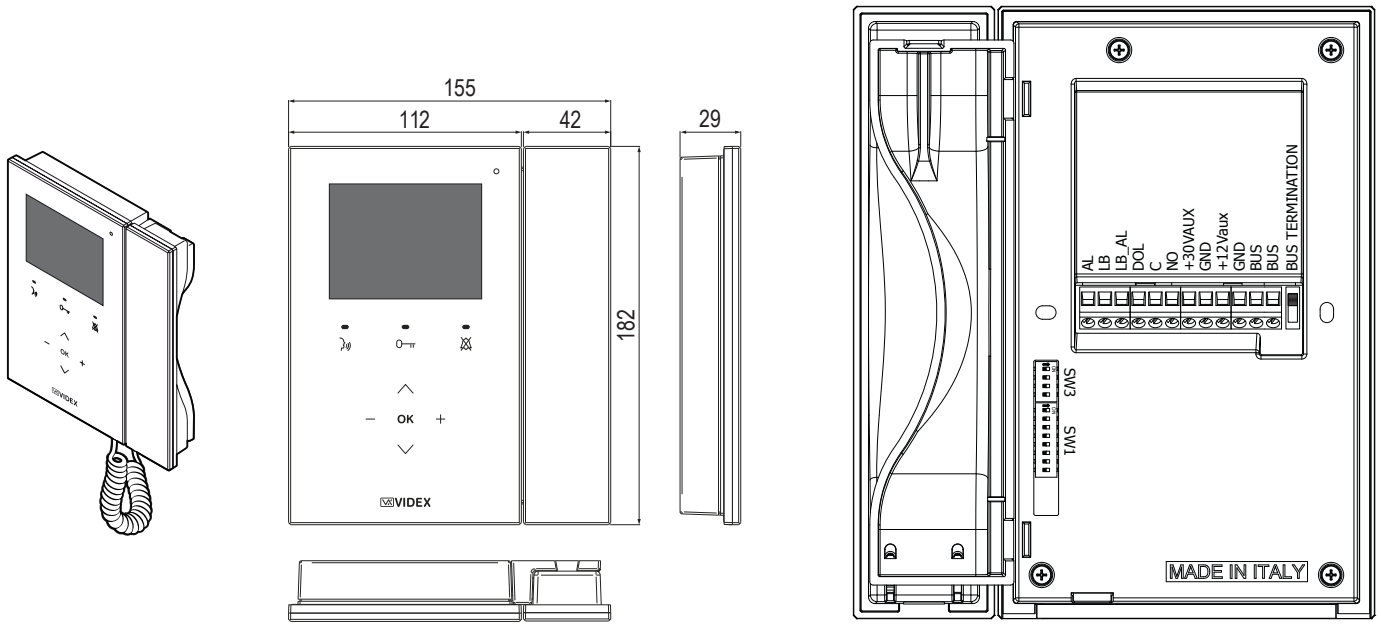

Fig. 1 Art. KRV86

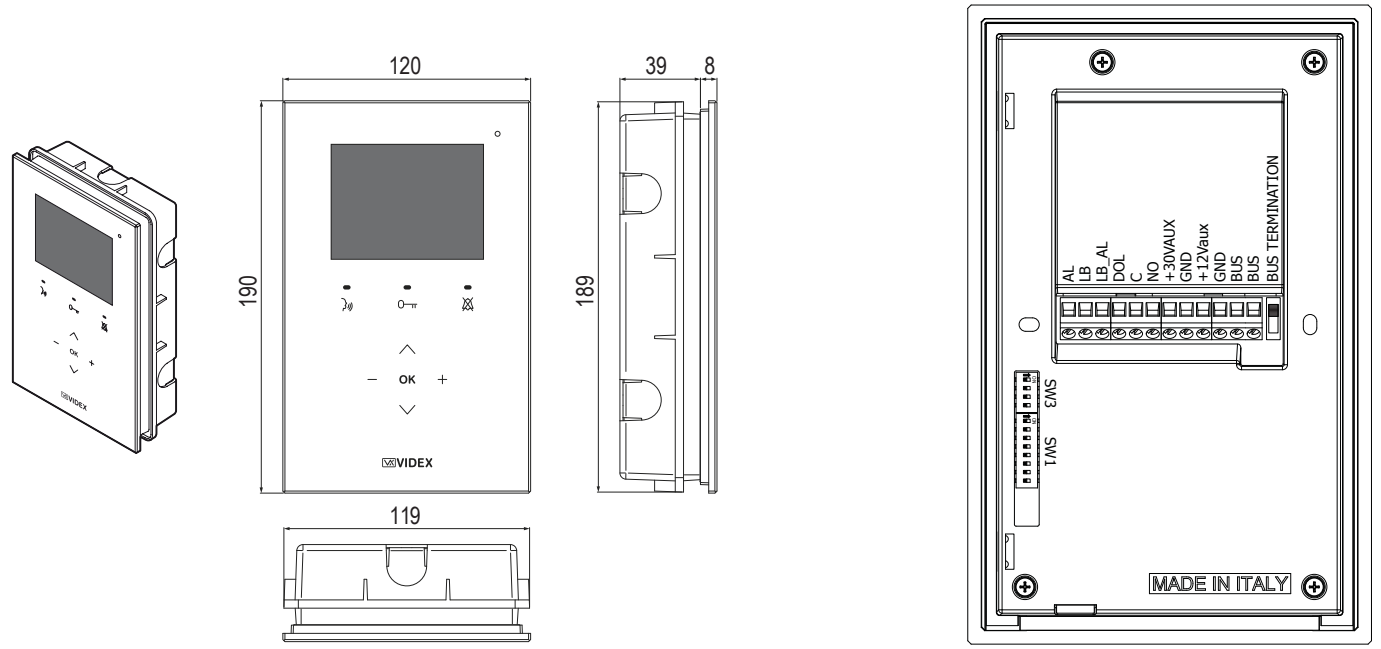

Fig. 2 Art. KRV88

DESCRIPTION

Intelligent Hands free video monitor for the VX2300 digital system using 3.5" OSD full colour active matrix LCD monitor, with touch sensitive buttons for "door open / service" , "answer/camera recall", "privacy / bus relay" plus 5 navigation menu buttons and 3 LEDs related to the videophone operation. For the surface version only (Art. KRV86), a handset can also be used in addition to the hands free mode. Additional features include a real time clock, a temperature sensor and a serial RS232 port for future integration with home automation systems.

PUSH BUTTONS AND CONTROLS (FIG. 1 - FIG. 2)	
	Answer Button Press this button during an incoming call to open the speech in duplex mode allowing free speech with the caller in both directions (The related LED will illuminate).
	Camera Recall Button When the system is in standby, (No calls on the system) operation of this button will open the speech to the door station. The related LED will illuminate. Press as many time as the ID value of the door panel to connect to.
	End Conversation Button During a conversation, momentary operation of this button will end the call. The LED next to the button will switch off. The system will automatically switch off when the conversation time expires.
	PTT Enable Button Press and hold this button (more than 1 second), during an incoming call or a conversation in progress, to allow the user to answer a call from a visitor at the door station in SIMPLEX speech mode (The related LED will flash rapidly): releasing the button will allow the user to listen to the visitor (The LED will flash slowly). Press and hold the button when you talk to the visitor and release the button when you listen to the visitor.
	Door Open Button During a conversation, momentary operation of this button will release the door from where the call originated. This will be confirmed by an acoustic tone and the key icon on the top of the screen under the date, time & temperature row. If terminal "DOL" is connected, the "door open" LED next to the button will also be illuminated.
	Aux Service Button During a conversation, keep pressed this button to enable the auxiliary service relay. This will be confirmed by a message on the display: terminals "C" and "NO" are internally linked until the button is released.
	Intercommunicating call button For an intercommunicating call, when the intercom is in stand-by, press as many times as the extension number (intercommunication among the apartment units) or address value to call (intercommunication among all the units of different apartments). For videophones with handset the intercommunication can be hands free or conventional by picking up the handset before calling.
	Privacy Button When the system is in stand-by, press this button to enable the service for the programmed time: the related LED will illuminate to signal the service enabled. During an incoming call, with the service enabled, the device does not emit any acoustic signal. The service is disabled when the programmed time expires or pressing again the button.
	Programming Menu Button With the system in stand-by, keep pressed this button until the monitor switches on showing the programming menu where you can set date & time, privacy duration, call tone volume, melody and number of rings. Once the menu is enabled, proceed with settings by the menu navigation buttons.
	Call Reject Button During an incoming call, press this button to reject the call. The visitor doesn't receive any warning of the call rejected.
	Adjustment Menu Button During a conversation, press this button to enter a programming menu that allows to set speech volume, picture brightness, contrast and hue. Once the menu is enabled, proceed with settings by the menu navigation buttons.
	Bus Relay Button During a conversation, keep pressed this button until the display shows a yellow band at the bottom side. Select the BUS Relay to enable by the buttons "Plus" and "Minus" then press OK to enable the relay.
	Menu navigation buttons These buttons to be used during adjustment and programming menus. Via these buttons you can set the date & time, the melody, the number of rings and the privacy duration and you can adjust the speech and call tone volume and the picture brightness, contrast and hue. Use ∧ & ∨ to move along settings, + and — to alter settings and **OK** button to confirm.
	Camera switch button If the door station uses the Art. 4303N plus the Art. 4330N or the Art.4302N/NR, pressing this button during a conversation switches the video signal coming from the camera module to the video signal coming from the camera module input for external camera. During the conversation, press the button until the camera switches. Repeat the operation to switch back to main camera.

PROGRAMMING

The programming consists of a number of settings that in part are carried out by a specific OSD menu and the rest is carried out by the two dip-switch banks on the rear side of the videophone:

- Date & Time (OSD);
- Privacy duration from 0 to 20 hours (OSD);
- Melody selection among 9 available (OSD);
- Number of rings from 1 to 9 (OSD);
- Unit address (1..127, switches 1 to 7 of SW1);
- Intercommunication mode (between apartments or within apartment switch 1 of SW3);
- Extension address (1..4, switches 2,3 of SW3);
- Slave mode (switch 4 of SW3);
- Bus Termination (switch to the right of the connection terminals).

Except OSD settings, it is necessary to remove temporary the power supply after making any other programming changes.

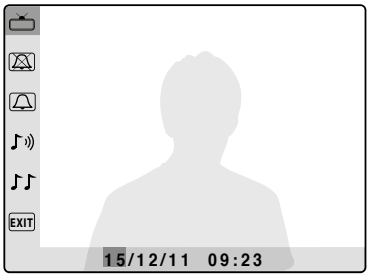

Fig. 3

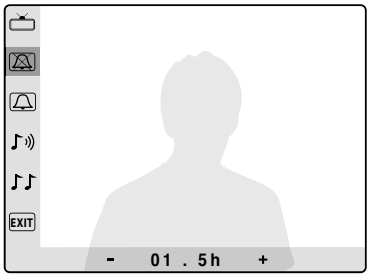

Fig. 4

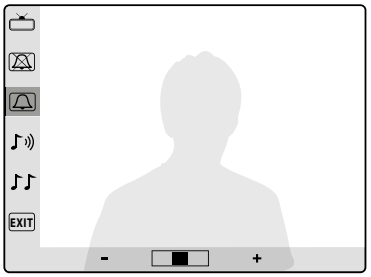

Fig. 5

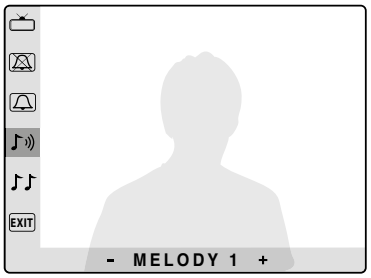

Fig. 6

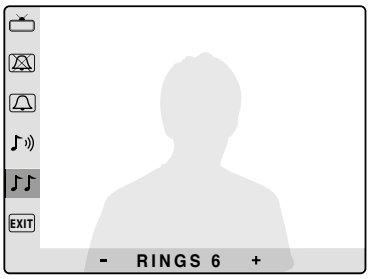

Fig. 7

PROGRAMMING OSD MENU

When the system is in stand-by, keep pressed the button ⛌ until the monitor switches on showing the screen to the left. The first programming option is the **date & time (Fig. 3)**:

- change the values by the + and — buttons;
- use buttons ∧ and ∨ to move between the fields to set (day, month, year, hours and minutes);
- confirm the setting by the **OK** button or the ∨ button when the field minutes is selected. The system goes to next programming step.

The second programming option is the **privacy duration (Fig. 4)** (from 0 to 20 hours):

- adjust the value by the buttons + and — (0 = privacy duration unlimited, the service is disabled by pressing again the button ⛌);
- confirm the value by the **OK** or ∨. The system jump to next programming option.

Proceed in the same way for the other programming options: **call tone volume** (3 level, **Fig. 5**), **melody** (9 options, **Fig. 6**) and **number of rings** (for 1 to 9, **Fig. 7**).

Once selected "EXIT" press **OK** to exit or button ∧ to return to edit programming options.

Note: from any of the two OSD menu's, if the videophone switches off because of the timeout, the controls and the programmings are not stored.

VIDEOPHONE ADDRESS – SW1.1..7

SW1.1..7

The table below shows how to set the address of the videophone. Considering that ON = 1 and OFF = 0, multiply each digit for the relevant decimal weight then sum values obtained to get the address: E.g. as highlighted in the table OFF,ON,OFF,OFF,ON, OFF,ON in binary is equal to 0100101 then multiplying each digit for the relevant decimal weight you obtain the address that is 37.

SWITCHES STATUS							BINARY CODE - DECIMAL WEIGHT							ADDRESS
7	6	5	4	3	2	1	64	32	16	8	4	2	1	
OFF	OFF	OFF	OFF	OFF	OFF	ON	0	0	0	0	0	0	1	1
OFF	OFF	OFF	OFF	OFF	ON	OFF	0	0	0	0	0	1	0	2
OFF	OFF	OFF	OFF	OFF	ON	ON	0	0	0	0	0	1	1	3
OFF	OFF	OFF	OFF	ON	OFF	OFF	0	0	0	0	1	0	0	4
OFF	ON	OFF	OFF	ON	OFF	ON	0	1	0	0	1	0	1	37
ON	ON	ON	ON	ON	ON	ON	1	1	1	1	1	1	1	127

Note: The maximum number of units allowed is 100 but the address of each unit can be a value between 1 and 127.

INTERCOMMUNICATION MODE – SW3.1

SW3.1

This switch establishes the intercommunication mode: in OFF position (default) intercommunication is between units in the same apartment (same addresses but different extension); in ON position the intercommunication is between units in different apartments (different addresses).

On installations where there are more than one intercom/videophone in the same apartment and intercommunication between different apartments is required, only one intercom/videophone may be set with this function (SW3.1=ON, SW3.2=OFF, SW3.3=OFF). The other intercom/videophones in the apartment must be set for local intercommunication with extension addresses "2-4" (slaves). From the intercom/videophone set for intercommunication with other apartments it will not be possible to intercommunicate within the apartment but slave extensions 2-4 will be able to intercommunicate with each other within the apartment.

EXTENSION NO – SW.2..3

SW3.2..3

If the intercommunication between apartments is enabled (switch 1 of SW3 = ON) leave these two switches in default position (both to OFF). Otherwise, if the intercommunication is between the same apartment (switch 1 of SW3 = OFF), set the extension addresses starting always from 1. During the external call, all video monitors in the same flat will ring but the video will be shown only from the videophone with extension address 1.

2	3	EXTENSION NO.
OFF	OFF	1 (default, master)
ON	OFF	2 (slave)
OFF	ON	3 (slave)
ON	ON	4 (slave)

SLAVE MODE - SW3.4

SW3.4

This set up concerns the answering mode of the video monitor when there is more than one unit (max 4) in the same apartment. OFF (default) = during a call, only the video monitor with extension 1 (master) will show the video. ON = the video monitor will be switched on independently of the extension address: in this case the video monitor must be supplied locally using a power supply Art. 2321 and connecting respectively BUS+ to terminal +VAUX and BUS- to terminal GND on the connection terminals (the local power supply is required for each black & white slave videophone or starting from the third slave videophone when they are all colour videophones).

If you set for one slave videophone, you must set ON the same switch also for the relevant master videophone.

BUS LINE TERMINATION

The factory pre-set is termination enabled. In case of more units (intercoms, videophones or video monitors) in a parallel connection (bus wires are connected to the terminals of the first unit then from this to the second and so on up to 4 units max) Termination must be enabled only for the last unit in the chain while on all other units must be disabled. In case of units of different type, videophones, video monitor, hands free or standard intercoms etc. remains fixed the rule that the bus termination must be enabled only on the last unit in order of connection.

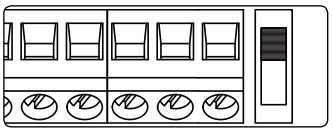
Termination enabled (factory pre-set).

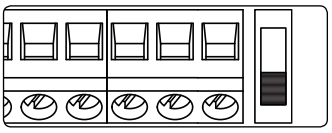
Termination disabled.

OPERATION

RECEIVING A CALL

During a call the display switches on showing the screen on **Fig. 8**:

- To answer in hands free mode press the button **(Fig. 9)** (or pick up the handset on model Art. KRV86);
- To open the door without speech to the visitor press the button **(Fig. 10)**;
- To reject the call without informing the visitor press the button **(Fig. 11)**.

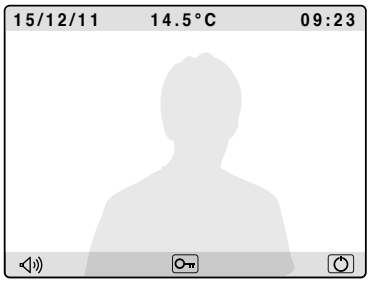

Fig. 8

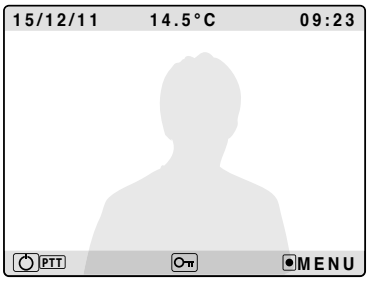

Fig. 9

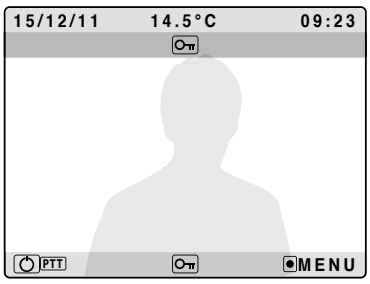

Fig. 10

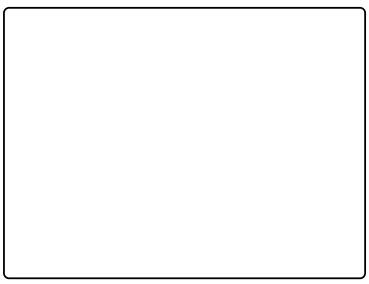
Fig. 11

DURING THE CONVERASTION

During the conversation **(Fig. 12):**

- To switch from hands free to push to talk mode, keep pressed the 🔊 until the related LED starts to flash slowly **(Fig. 13).** Keep pressed the 🔊 button to talk to the visitor (the LED flashes quickly) and release the button (the LED flashes slowly) to listen the visitor;
- To open the door press the 🔑 button **(Fig. 14)**
- To enable the secondary service keep pressed the 🔑 button until the activation signals (call tone plus message) are received **(Fig. 15);**
- To enable the BUS relay Art. 2305 (if connected on the pass) keep pressed the button ⛶ until the display shows the picture in **Fig. 16** then select the BUS relay to enable by the buttons — and + and confirm with **OK** button.
- To enter into programming menu press the ⛶ button **(Fig. 17).**

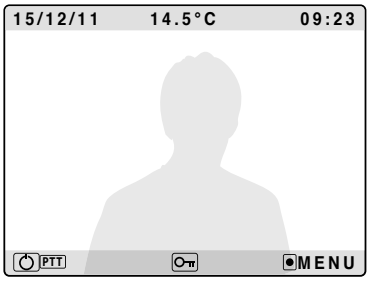

Fig. 12

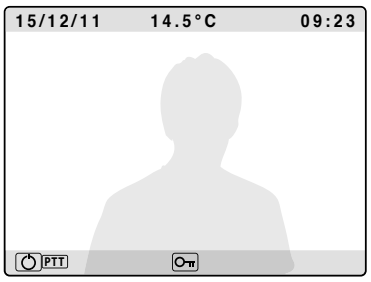

Fig. 13

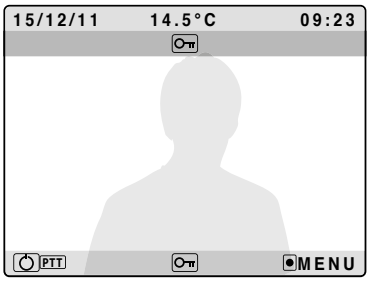

Fig. 14

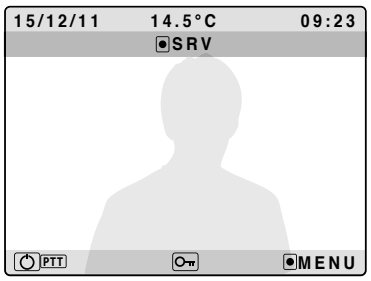

Fig. 15

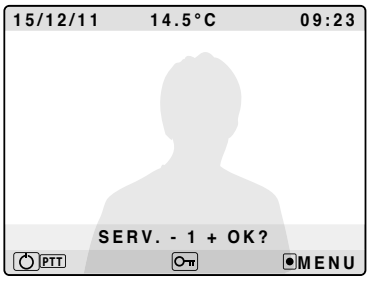

Fig. 16

ADJUSTMENTS MENU

In the programming menu you can set:

- The speech volume (8 levels, **Fig. 17**);
- The picture brightness (8 levels, **Fig. 18**);
- The picture contrast (8 levels, **Fig. 19);**
- The picture hue (8 levels, **Fig. 20**);

Adjust the selected option using the buttons — and + then confirm by the button **OK** to move to next option or use the ∧ and ∨ buttons to navigate the options. With "EXIT" selected, press **OK** to exit from the menu or ∧ do adjust other settings.

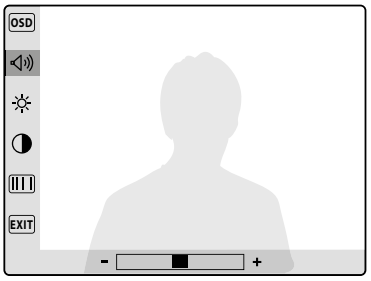

Fig. 17

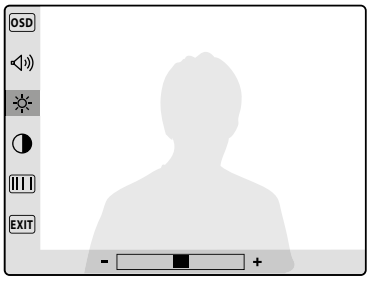

Fig. 18

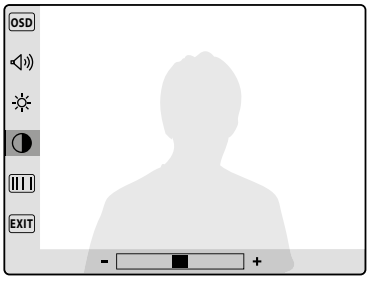

Fig. 19

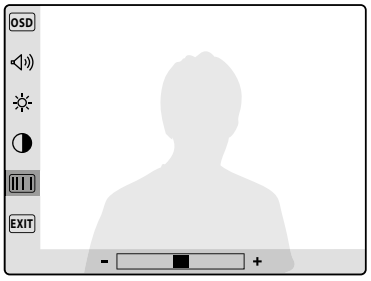

Fig. 20

TERMINALS		
AL	Alarm input (not implemented yet)	
LB	Local bell input (active low)	
LB_AL	Ground output for use in combination with "AL" & "LB" active low inputs	
DOL	Auxiliary LED power supply input (+12Vdc – normally used as "DOOR OPEN" LED)	
C	Dry contacts relay common contact (during a conversation, keep pressed the 0⊸ button for more than 3 seconds to enable the internal link between terminals "C" and "NO" – the link remains until the button is released).	**Max 50Vdc @ 100mA**
NO	Dry contacts relay normally open contact (during a conversation, keep pressed the 0⊸ button for more than 3 seconds to enable the internal link between terminals "C" and "NO" – the link remains until the button is released).	
+30Vaux	Auxiliary 30Vdc power supply input (to be used when the switch 4 of SW3 is set to ON when more videophone have the same address and must be switched ON at the same time).	
GND	30Vdc power supply ground	
+12Vaux	Auxiliary 12Vdc power supply input for memory board version (not implemented yet)	
GND	12Vdc power supply ground	
BUS	Bus input terminal	
BUS	Bus input terminal	

TECHNICAL SPECIFICATION

Housing/Mounting: Kristallo Series 3.5" videophones - flush or surface mountig
Push buttons: Yes, 8
Programming: Yes, carried out by the dip-switches located on the rear of the videophone
Controls: Loudspeaker and call tone volume, brightness
Power Supply: Supplied by the BUS line
Power consumption: Stand-by: 3.3mA Max
Operating: 130mA Max
Working temperature: -10°C +50°C

RESTORING FACTORY PRESET

To restore factory preset, proceed as follows:

- Cut off power supply;
- Make a short between "LB" and "GND" terminals;
- Restore power supply and wait until LED)))) blinks twice before remove the short.

The unit parameters are restored to factory preset.

Kristallo Series 3.5" flush and surface videomonitor wall mounting instructions

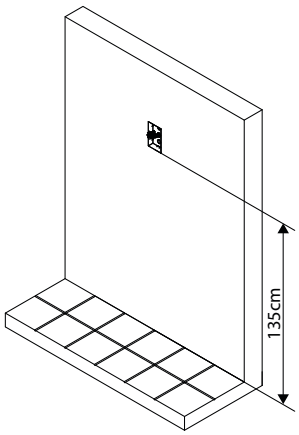

fig. 1

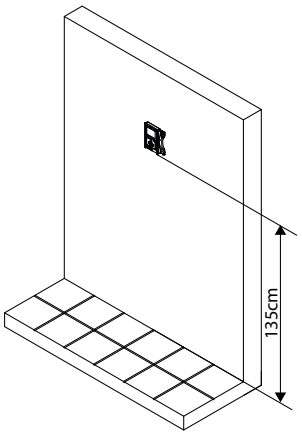

fig. 1a

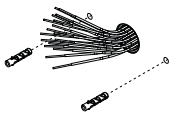

fig. 1b

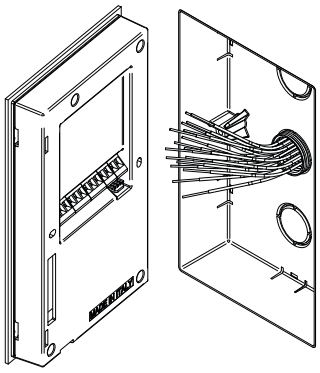

fig. 2

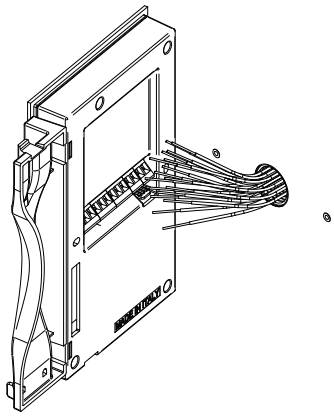

fig. 2a

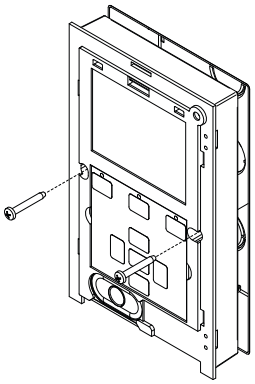

fig. 3

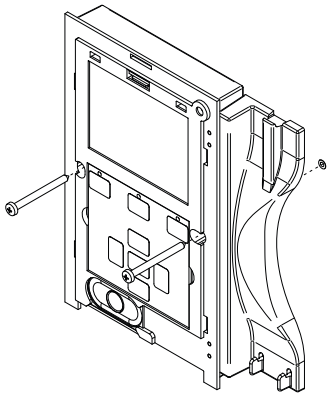

fig. 3a

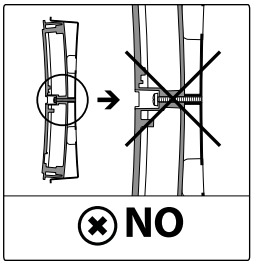

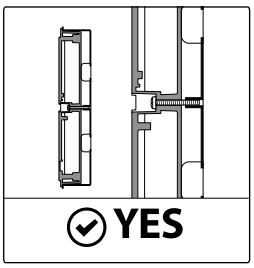

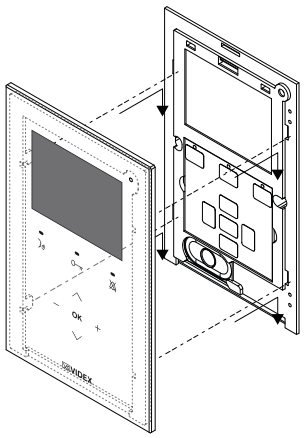

fig. 4

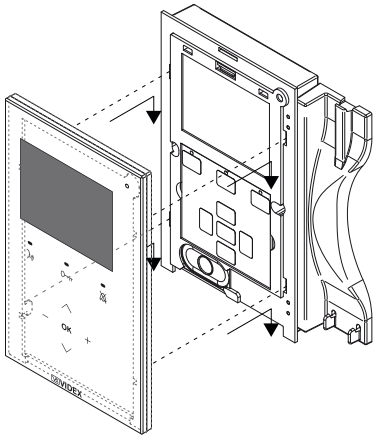

fig. 4a

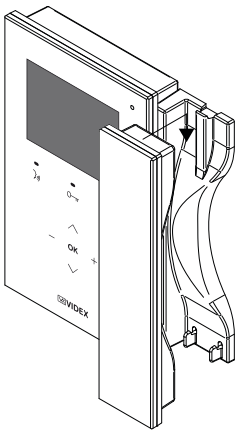

fig. 4b

FLUSH MOUNT KRISTALLO VIDEOPHONE

1. Protect the holes to fix the videophone to the flush mounting box then embed the flush mounting box in line with the wall in a vertical position at 135cm height from the floor as shown in **figure 1.**
2. As shown in **figure 2,** connect the wires using a flat screw driver then setup the dip-switches as per provided connection diagram or instruction sheet.
3. As shown in **figure 3,** once the wires are connected, fix the videophone to the flush mounting box using a Phillips screwdriver and the two screws provided.

⚠ **In order to avoid malfunctions, please do not over tighten the fixing screws shown in figure 3.**

4. Once the videophone is fixed to the flush mounting box, place the front plate against the videophone by inserting the hooks in the corresponding openings and hook the plate by pushing it down as shown in **figure 4**.
5. Test the system for correct operation.

SURFACE MOUNT KRISTALLO VIDEOPHONE

1. As shown in figure 1a, place the videophone against the wall at 135cm height from the floor and mark the fixing holes. Make the holes (5mm diameter) and insert the provided wall plugs as shown in **figure 1b.**
2. As shown in **figure 2a,** connect the wires using a flat screw driver then setup the dip-switches as per provided connection diagram or instruction sheet.
3. As shown in **figure 3a,** once the wires are connected, fix the videophone to the wall using a Phillips screwdriver and the two screws provided.

⚠ **In order to avoid malfunctions, please do not over tighten the fixing screws shown in figure 3a.**

4. Once the videophone is fixed to the wall, place the front plate against the videophone by inserting the hooks in the corresponding openings and hook the plate by pushing it down as shown in **figure 4a** and hang the handset as shown in **figure 4b.**
5. Test the system for correct operation.

TOUCH SENSITIVE KEYS ADJUSTMENT

Cleansing the panel with the plate on or removing the plate for any reason may cause the touch sensitive buttons to lose their adjustment. If you detect any malfunctions, we suggest you proceed as follows:

- Remove the front plate doing the contrary of what is shown in **figure 4a** and **4a**;
- Touch the touch sensitive ⛛ button area (the first of the three areas aligned in horizontal way from the right side)until the display turns on (about 5 seconds);
- Touch the touch sensitive **OK** button area repeatedly until the pointer is on "EXIT";
- Hang up the front plate as shown in picture **figure 4a** and **4a**; before the display turns off;
- When the display turns off the setting is done and the system is ready for use.

Art. KRV782 7" Hands free videomonitor for VX2300 digital system

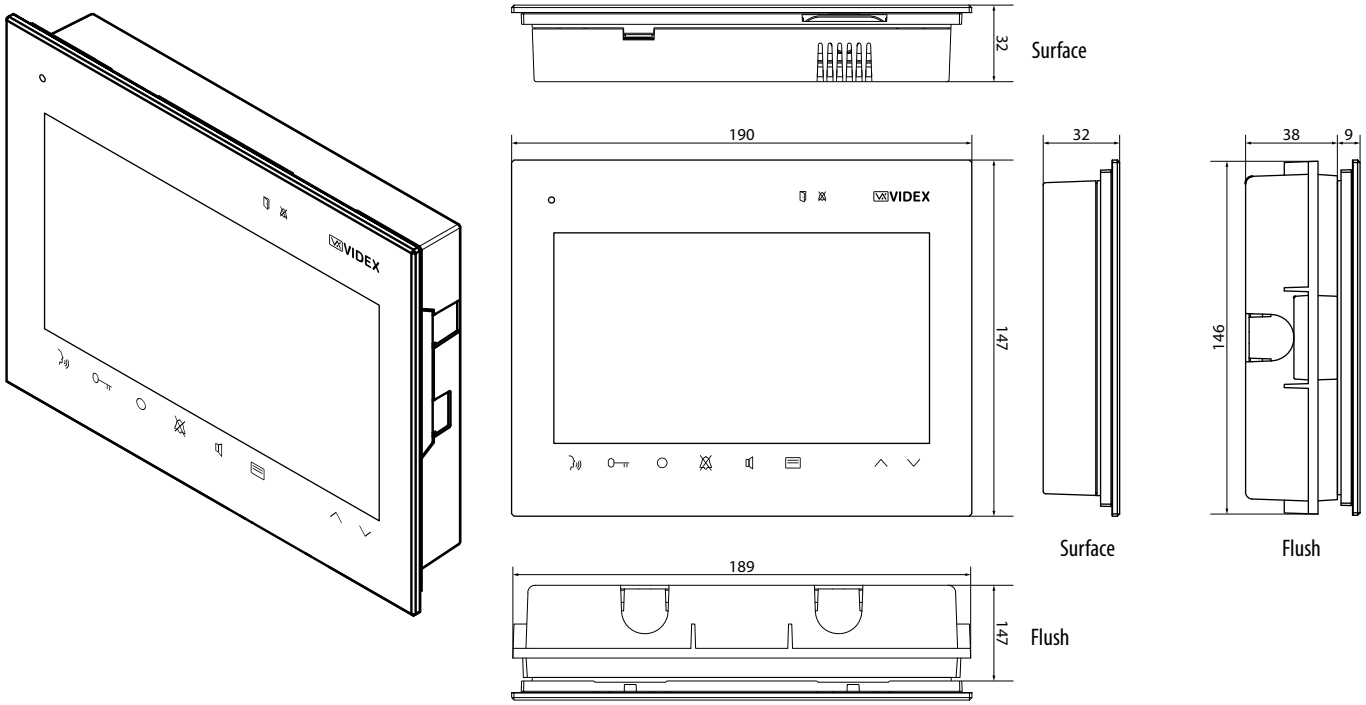

Fig. 1

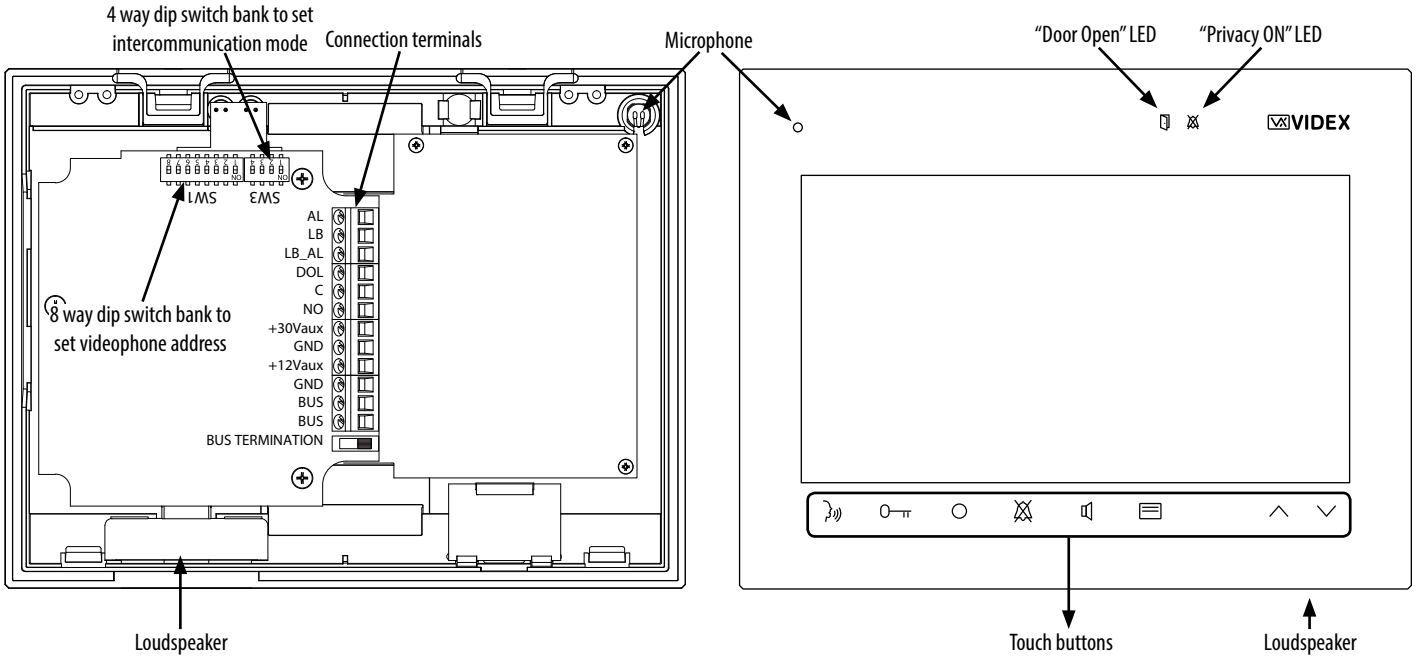

Fig. 2

DESCRIPTION

Intelligent Hands free video monitor for the VX2300 digital system using a 7" 800x480 pixel resolution full colour active matrix LCD monitor with capacitive touch sensitive buttons for "door open/concierge call", "answer/camera recall", "auxiliary service", "privacy" plus 4 buttons for adjustment and programming and 2 LED's related to the videophone operation. 2 LED's indicating the door open/close status (requires an additional wire) and the activation/deactivation of the privacy are also inclusive. The videomonitor includes an intercommunication facility that enables intercommunication between devices in the same apartment (same PHONE ID but different extension address) or between devices installed in different apartments (different PHONE ID). Programming and settings are available through the touch buttons. Adjustable speech and melody volume, picture brightness, programmable number of rings, privacy service duration, melody and the extension ID for intercommunication.

OPERATION

DURING STAND-BY	
	Camera recall Press a number of times equal to the ID value of the door panel to switch ON. When the connection is made, press again to end the call.
	Intercommunication call Press as many times as the extension number (intercommunication with units in the same apartment) or address value to call (intercommunication with units in a different apartment).
	Active bus relay board Art. 2305 Press this button quickly as many times as the address value of the relay (1 "beep" for each press).
	Privacy service Press to enable the privacy service. The LED " " turns on. The service is deactivated by pressing again the same button or when the programmed time expires.
	Melody volume Press to increase or decrease the melody volume.

DURING A CALL	
	Answer a call Press to answer the call and start the conversation.
	Open the door Press to activate the door open relay of the outdoor unit and end the connection. The " " LED will flash then the unit returns to stand-by mode.
	Active bus relay board Art. 2305 Press this button quickly as many times as the address value of the relay (1 "beep" for each press).
	Reject the call During an incoming call, press this button to reject the call. The visitor doesn't receive any warning of the call rejected.

DURING A CONVERSATION		
	End conversation Press to end a call.	**Activate "Push to Talk" mode** Keep pressed to activate simplex "Push to Talk" mode: press and keep pressed to talk, release the button to listen.
	Open the door Press to activate the door open relay of the outdoor unit. The " " LED will flash.	
	Active bus relay board Art. 2305 Press this button quickly as many times as the address value of the relay (1 "beep" for each press).	
	Camera switch button If the door station uses the Art. 4303N plus the Art. 4330N or the Art.4302N/NR, pressing this button during a conversation switches the video signal coming from the camera module to the video signal coming from the camera module input for external camera. During the conversation, press the button and the camera switches (If no camera is connected you will see a black screen). Repeat the operation to switch back to main camera.	
	Speech volume adjustment Press then use " " or " " buttons to increase or decrease the speech volume (1 "beep" for each press).	
	Picture brightness adjustment Press then use " " or " " buttons to increase or decrease the picture brightness (1 "beep" for each press).	

LED'S	
	Door open LED Indicates if the door is open (requires an additional wire).
	Privacy service LED Indicates if privacy service is enabled or disabled.

PROGRAMMING

All programming options are available only when the system is in stand-by.

NUMBERS OF RINGS

1. Press and keep pressed " ○ " button for 5 seconds to enter number of rings programming mode: the " ⊠ " LED turns on and the unit emits a "beep";
2. Press " ○ " button as many rings as required: the unit emits a "beep" every time the button is pressed. **I.E.**: press 3 times for 3 rings. Default value: 3 rings. Max value: 9 rings;
3. Wait for some seconds: the " ⊠ " LED turns off and confirms the new setting is properly stored;
4. The unit returns to stand-by mode.

PRIVACY SERVICE DURATION

1. Press and keep pressed " ⊠ " button for 5 seconds to enter privacy service duration programming mode: the " ⊠ " LED turns on and the unit emits a "beep";
2. Press " ⊠ " button as many times as required. Each press is equal to 15 minutes: the unit emits a "beep" every time the button is pressed. **I.E.**: press 4 times for 1 hour, 12 for 3 hours. Default: infinite. Max value: 20 hours. To program infinite privacy time don't press any button until the unit emits a "beep" to confirm the setting;
3. Wait for some seconds: the " ⊠ " LED turns off and confirms the new setting is properly stored;
4. The unit returns to stand-by mode.

MELODY TYPE

1. Press and keep pressed " ○— " button for 5 seconds to enter melody type programming mode: the " ⊠ " LED turns on and the unit emits a "beep";
2. Press and keep pressed " ○— " button to play the current melody. Release " ○— " button then press and keep it pressed again to play the next melody. Proceed in the same manner to select the melody;
3. When desired melody is selected, wait for some seconds and the " ⊠ " LED will turn off;
4. The unit returns to stand-by mode.

VIDEOPHONE ADDRESS – SW1.1..7

SW1.1..7

The table below shows how to set the address of the videophone. Considering that ON = 1 and OFF = 0, multiply each digit for the relevant decimal weight then sum values obtained to get the address: E.g. as highlighted in the table OFF,ON,OFF,OFF,ON, OFF,ON in binary is equal to 0100101 then multiplying each digit for the relevant decimal weight you obtain the address that is 37.

SWITCHES STATUS							BINARY CODE - DECIMAL WEIGHT							ADDRESS
7	**6**	**5**	**4**	**3**	**2**	**1**	**64**	**32**	**16**	**8**	**4**	**2**	**1**	
OFF	OFF	OFF	OFF	OFF	OFF	ON	0	0	0	0	0	0	1	1
OFF	OFF	OFF	OFF	OFF	ON	OFF	0	0	0	0	0	1	0	2
OFF	OFF	OFF	OFF	OFF	ON	ON	0	0	0	0	0	1	1	3
OFF	OFF	OFF	OFF	ON	OFF	OFF	0	0	0	0	1	0	0	4
OFF	ON	OFF	OFF	ON	OFF	ON	0	1	0	0	1	0	1	37
ON	ON	ON	ON	ON	ON	ON	1	1	1	1	1	1	1	127

Note: The maximum number of units allowed is 100 but the address of each unit can be a value between 1 and 127.

INTERCOMMUNICATION MODE – SW3.1

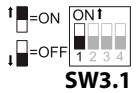

SW3.1

This switch establishes the intercommunication mode: in OFF position (default) intercommunication is between units in the same apartment (same addresses but different extension); in ON position the intercommunication is between units in different apartments (different addresses).

On installations where there are more than one intercom/videophone in the same apartment and intercommunication between different apartments is required, only one intercom/videophone may be set with this function (SW3.1=ON, SW3.2=OFF, SW3.3=OFF). The other intercom/videophones in the apartment must be set for local intercommunication with extension addresses "2-4" (slaves). From the intercom/videophone set for intercommunication with other apartments it will not be possible to intercommunicate within the apartment but slave extensions 2-4 will be able to intercommunicate with each other within the apartment.

EXTENSION NO – SW.2..3

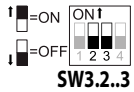

SW3.2..3

If the intercommunication between apartments is enabled (switch 1 of SW3 = ON) leave these two switches in default position (both to OFF). Otherwise, if the intercommunication is between the same apartment (switch 1 of SW3 = OFF), set the extension addresses starting from 1. During the external call, all video monitors in the same flat will ring but the video will be shown only from the videophone with extension address 1.

2	3	EXTENSION NO.
OFF	OFF	1 (default, master)
ON	OFF	2 (slave)
OFF	ON	3 (slave)
ON	ON	4 (slave)

SLAVE MODE - SW3.4

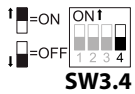

SW3.4

This set up concerns the answering mode of the video monitor when there is more than one unit (max 4) in the same apartment. OFF (default) = during a call, only the video monitor with extension 1 (master) will show the video. ON = the video monitor will be switched on independently of the extension address: in this case the video monitor must be supplied locally using a power supply Art. 2321 with connections BUS+ to terminal +VAUX and BUS- to terminal GND on the connection terminals (the local power supply is required for each black & white slave videophone or starting from the third slave videophone when they are all colour videophones).
This switch should also be set to ON on the master videophone when this mode is used.

BUS LINE TERMINATION

The factory pre-set is termination enabled. In case of more units (intercoms, videophones or video monitors) in a parallel connection (bus wires are connected to the terminals of the first unit then from this to the second and so on up to 4 units max) Termination must be enabled only for the last unit in the chain while on all other units must be disabled. This rule applies even if the devices in the apartment are of a different type (Telephone videophone video monitor etc).

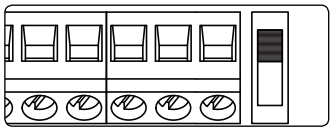
Termination enabled (factory pre-set).

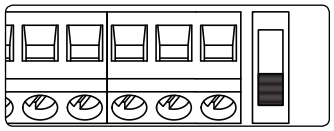
Termination disabled.

TERMINALS		
AL	Alarm input (not implemented yet)	
LB	Local bell input (active low)	
LB_AL	Ground output for use in combination with "AL" & "LB" active low inputs	
DOL	Auxiliary LED power supply input (+12Vdc – normally used as "DOOR OPEN" LED)	
C	Dry contacts relay common contact (during a conversation, keep pressed the 0⊸ button for more than 3 seconds to enable the internal link between terminals "C" and "NO" – the link remains until the button is released).	**Max 50Vdc @ 100mA**
NO	Dry contacts relay normally open contact (during a conversation, keep pressed the 0⊸ button for more than 3 seconds to enable the internal link between terminals "C" and "NO" – the link remains until the button is released).	
+30Vaux	Auxiliary 30Vdc power supply input (to be used when the switch 4 of SW3 is set to ON when more videophones have the same address and must be switched ON at the same time).	
GND	30Vdc power supply ground	
+12Vaux	Auxiliary 12Vdc power supply input for memory board version (not implemented yet)	
GND	12Vdc power supply ground	
BUS	Bus input terminal	
BUS	Bus input terminal	

TECHNICAL SPECIFICATION

Housing/Mounting: Kristallo Series 7" videophones - flush or surface mountig
Push buttons: Yes, 8
Programming: Yes, carried out by the dip-switches located on the rear of the videophone
Controls: Loudspeaker and call tone volume, brightness
Power Supply: Supplied by the BUS line
Power consumption: Stand-by: 3.3mA Max
Operating: 250mA Max
Working temperature: -10°C +50°C

RESTORING FACTORY PRESET

To restore factory preset, proceed as follows:
- Cut off power supply;
- Make a short between "LB" and "GND" terminals;
- Restore power supply and wait until LED ⊠ blinks twice before removing the short.

The unit parameters are restored to factory preset.

Kristallo Series 7" flush and surface videomonitor wall mounting instructions

REMOVE THE BACK COVER

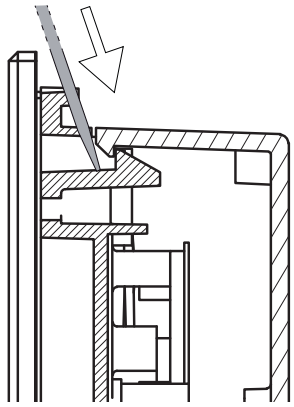

Fig. 1

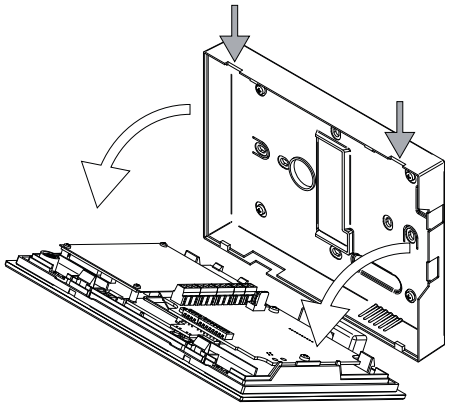

Fig. 2

1. To install the videophone, it is necessary to remove the back cover. Apply pressure to the two openings indicated by the grey arrows (**Fig. 2**) using a flat screwdriver.
2. Insert the screwdriver blade in the opening (**Fig. 1**) with an angle of 45 degree and press lightly (simply press, do not force the opening with the screwdriver blade) to unfasten the bottom hook and, at the same time, lightly pull the upper part in the direction of the white arrows of **Fig. 2**. **N.B.repeat the same operation with both openings.**

FLUSH MOUNTING INSTRUCTIONS

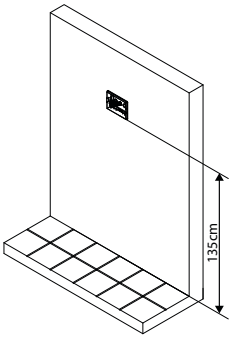

Fig. 3

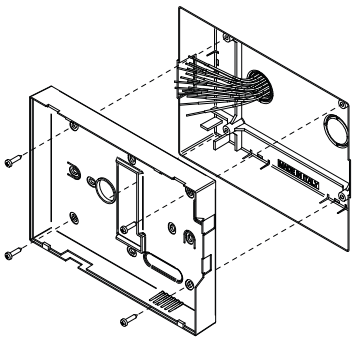

Fig. 4

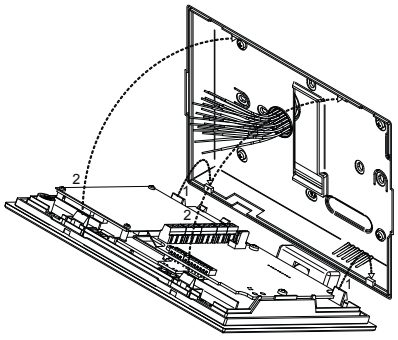

Fig. 5

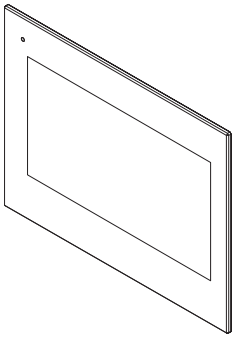

Fig. 6

1. First of all remove the back cover as described above;
2. Protect the holes to fix the videophone to the flush mounting box then embed the flush mounting box in line with the wall **in a horizontal position** at 135cm height from the floor as shown in **Fig. 3**;
3. As shown in **Fig. 3**, fix the back cover of the videophone to the flush mounting box keeping the same orientation shown in the figure and taking care to feed the connection cables through the specific circular opening;
4. Connect the wires using a flat screw driver then setup the dip-switches as per provided connection diagram or instruction sheet and fix the front part of the videophone to the back cover as shown in **Fig. 5**: hook first the bottom side then rotate the front part and hook the upper side;

⚠ In order to avoid malfunctions, please do not over tighten the screws.

5. The video intercom is installed (**Fig. 6**), power up the system and check that it works correctly.

SURFACE MOUNTING INSTRUCTIONS

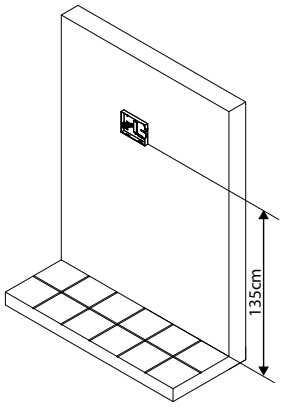

Fig. 7

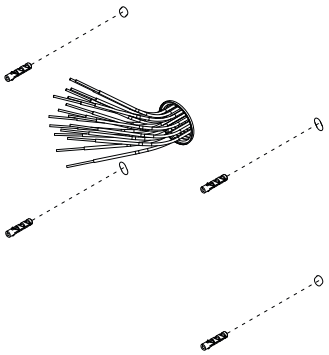

Fig. 8

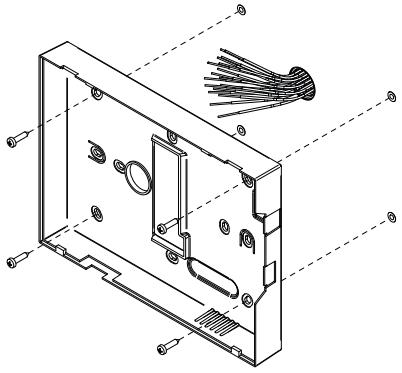

Fig. 9

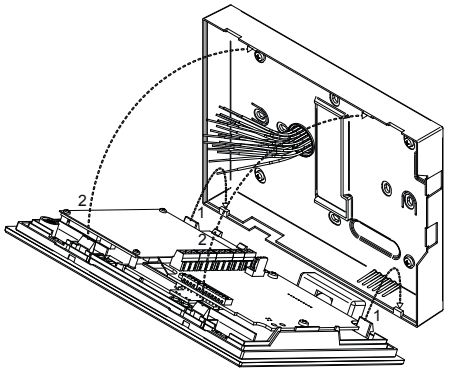

Fig. 10

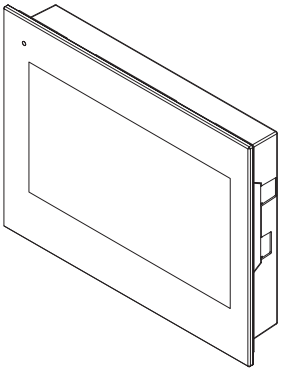

Fig. 11

1. First of all remove the back cover as described on the previous page;
2. As shown in **Fig. 7**, place the videointercom back cover against the wall at 135cm height from the floor and mark the fixing holes. Make the holes (5mm diameter) and insert the provided wall plugs as shown in **Fig. 8**;
3. As shown in figure **Fig. 9**, fix the back cover of the videophone to the wall keeping the same orientation shown in the figure and taking care to feed the connection cables through the specific circular opening;
4. Connect the wires using a flat screw driver then setup the dip-switches as per provided connection diagram or instruction sheet and fix the front part of the videophone to the back cover as shown in **Fig. 10**: hook first the bottom side then rotate the front part and hook the upper side;

⚠ In order to avoid malfunctions, please do not over tighten the screws.

5. The video intercom is installed (**Fig. 11**), power up the system and check that it works correctly.

Art. 317N Active/passive four way distribution box

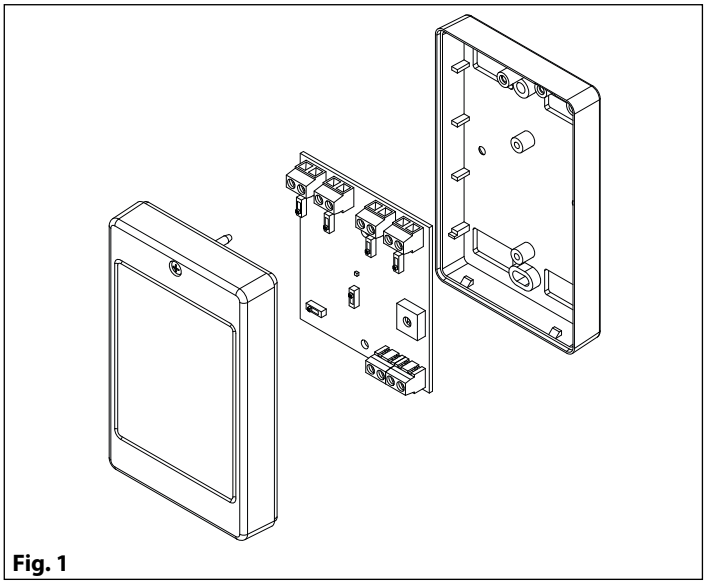

Fig. 1

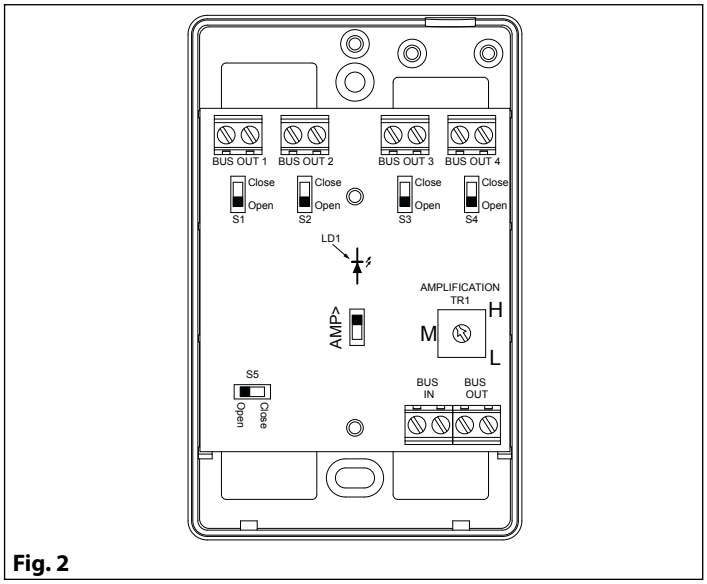

Fig. 2

DESCRITPION

The unit distributes the bus signal to 4 outputs linked to videophones or intercoms. A switch ("AMP>") allows to enable (active) or disable (passive) the amplification. If active, the amplification can be adjusted in a linear way by a built-in trimmer. To make the amplification adjustment easy, the related positions corresponding to a low level , a medium level and to a high level are marked. The amplification only effects the 4 outputs and not the loop through output. Art. 317N also includes a bus isolation feature which isolates Art. 317N from the rest of the bus in case a short on one of its outputs occurs . This prevents a short from happening in any apartment impairing the whole system. In case of short on any BUS output the LED LD1 switches ON.

CONNECTION TERMINALS AND JUMPERS	
BUS IN	Bus input terminals
BUS OUT	Bus output terminals (loop through to next distributor)
BUS OUT 1	Videophone/Intercom bus output 1
BUS OUT 2	Videophone/Intercom bus output 2
BUS OUT 3	Videophone/Intercom bus output 3
BUS OUT 4	Videophone/Intercom bus output 4
S1	Close/Open bus output jumper for BUS OUT 1. Move to close when BUS OUT 1 is not used
S2	Close/Open bus output jumper for BUS OUT 2. Move to close when BUS OUT 2 is not used
S3	Close/Open bus output jumper for BUS OUT 3. Move to close when BUS OUT 3 is not used
S4	Close/Open bus output jumper for BUS OUT 4. Move to close when BUS OUT 4 is not used
S5	Close/Open bus through output. If the distributor is the last in line move to close otherwise leave open
AMP>	Enable (upper position toward the BUS output terminals) or Disable (lower position) the amplification on the BUS OUTPUTS from 1 to 4
AMPLIFICATION	Set the required level of amplification choosing between low, medium and high

TECHNICAL SPECIFICATION

Housing/Mounting: Plastic box 70x110x30mm / direct wall mounting
Push buttons: N/A
Programming: N/A
Controls: Outputs amplification (3 levels)
Power supply: Supplied by the BUS line
Working temperature: -10° +50° C

Art. 318 Two way passive distribution box

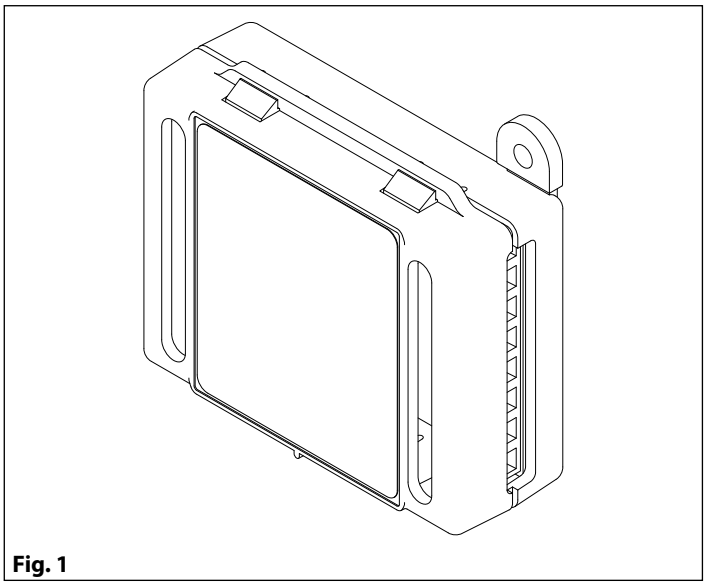

Fig. 1

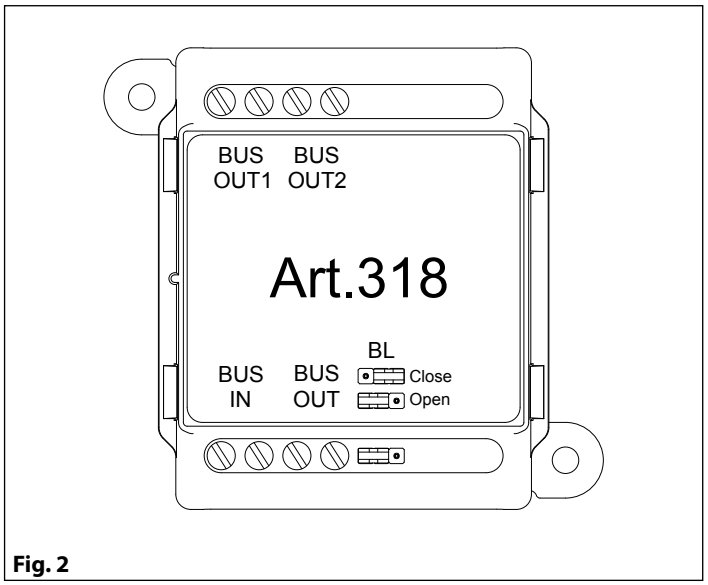

Fig. 2

DESCRIPTION

The unit distributes the bus signal to 2 outputs linked to videophones or intercoms. It is a passive distributor, so there is no possibility to adjust the video amplification. The device is suitable for small systems with a maximum distance between door panel and the last monitor of 70 metres.

CONNECTION TERMINALS AND JUMPERS	
BUS IN	Bus input terminals
BUS OUT	Bus output terminals (to next distrbutor)
BUS OUT 1	Videophone/Intercom bus output 1
BUS OUT 2	Videophone/Intercom bus output 2
BL	Close/Open bus output jumper. If the distributor is the last move to close otherwise leave open.

SPECIFICATION

Housing/Mounting: Plastic box 50x60x20mm / direct wall mounting
Push Buttons: N/A
Programming: N/A
Controls: N/A
Power Supply: Supplied by the BUS line
Working Temperature: -10 +50°C

Art. 2315 BUS booster and video signal amplifier

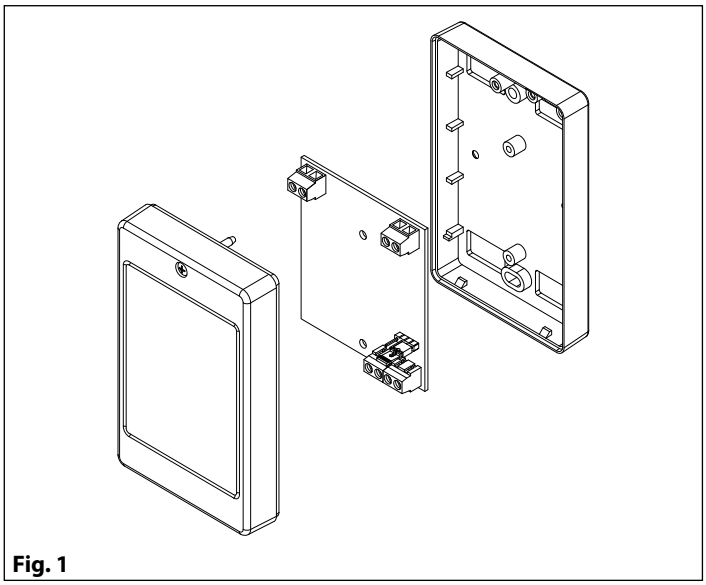

Fig. 1

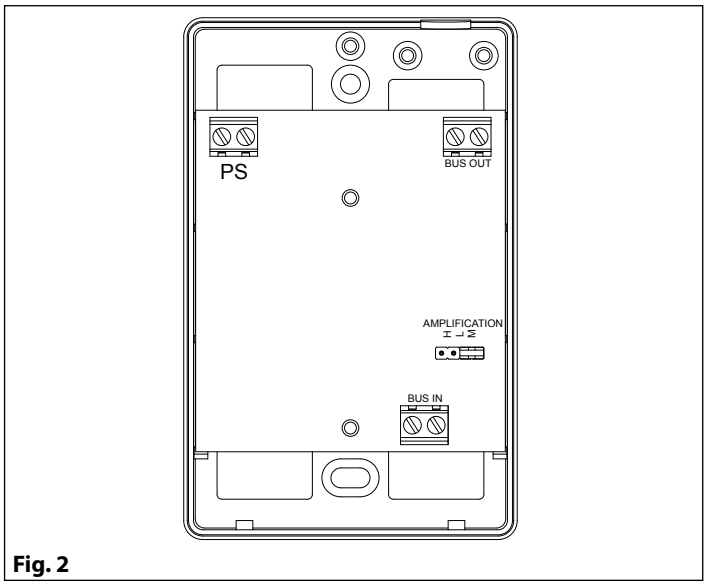

Fig. 2

DESCRIPTION

The Art. 2315 restores the voltage levels of the BUS line and amplifies the video signal (3 levels: H=high, M=medium and L=low). The BUS line must be interrupted and connected to the BUS-IN input, then the signal from the BUS-OUT will be amplified. Connect to the PS input a power supply Art. 2321. We suggest the use of the BUS booster in installations which are not using the VIDEX CM2 cable and it is necessary to reach large cables distances. (i.e. Using CAT5, distances greater than 70m).

CONNECTION TERMINALS AND JUMPERS	
BUS IN	BUS line input
BUS OUT	BUS line output
PS	Power supply input (use Art. 2321)
AMPLIFICATION	Video signal amplification, 3 levels = high, medium and low

SPECIFICATION

Housing/Mounting: Plastic box 70x110x30mm / direct wall mounting
Push Buttons: N/A
Programming: N/A
Controls: Video signal amplification (3 levels)
Power Supply: Requires local Art. 2321 PSU
Working Temperature: -10 +50°C

Art. 2301N Entrances exchanger for VX2300 digital systems

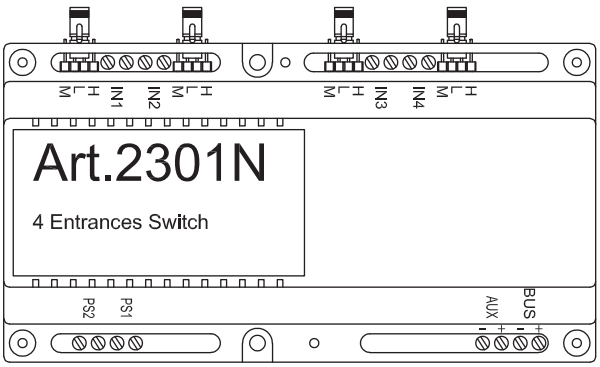

Fig. 1

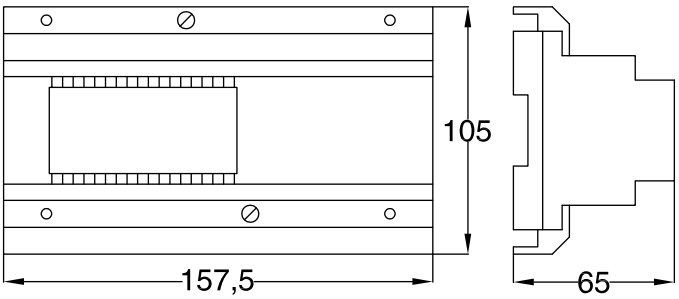

Fig. 2

DESCRITPION

This unit is required for systems with 2 or more entrances (4 maximum). The Art. 2301N has 4 inputs (IN1..IN4) each with adjustable amplification ("L" = low, "M" = medium and "H" = high) to compensate for different door station distances. The AUX input enables a second Art. 2301N device to be connected to expand the system up to 8 entrances. When connecting 2xArt. 2301N the polarity of the bus between the Art. 2301N's must be observed. When connecting 2xArt. 2301N's the BUS output of the second exchanger must be linked to the AUX input of the first exchanger and then onto the apartments from the BUS output of the first exchanger. The polarities are not relevant if there is only one Art. 2301N.

The power supply inputs are PS1and PS2. The Art. 2321/P with its jumper set to V2 should be used. For systems with up to 4 entrances and 50 video- phones only one power supply is required connected to PS1. For larger systems connect a power supply to each of the two inputs (PS1 & PS2).

When 2xArt. 2301N, the 2xArt. 2321/P power supplies only connect to the Art. 2301N at which the AUX connection is used. (The one supplying the apartments).

CONNECTION TERMINALS AND JUMPERS	
BUS–	BUS Output (observe the polarities only when linked to the AUX input of a second Art. 2301N)
BUS+	
AUX–	Auxiliary BUS input to carry out systems up to 8 entrances linking together two Art. 2301N (observe the polarities when connecting the BUS output of the first exchanger to the AUX of the second BUS- with AUX- and BUS+ with AUX+)
AUX+	
IN1	Door station input 1 (the signal may be amplified by the relative jumper – L=Low, M=Medium and H=High)
IN2	Door station input 2 (the signal may be amplified by the relative jumper – L=Low, M=Medium and H=High)
IN3	Door station input 3 (the signal may be amplified by the relative jumper – L=Low, M=Medium and H=High)
IN4	Door station input 4 (the signal may be amplified by the relative jumper – L=Low, M=Medium and H=High)
PS1	Power Supply input 1 (use Art. 2321/P set to V2 voltage level)
PS2	Power Suppy input 2 (use Art. 2321/P set to V2 voltage level)

TECHNICAL SPECIFICATION

Housing/Mounting: 9 Module A Type DIN box / DIN Bar or directly to the wall
Push buttons: N/A
Programming: N/A
Controls: Signal amplification on 3 levels for each bus input
Power supply: From specific power supply or from the bus
Working temperature: -10° +50° C

Art. 2306N Block exchanger

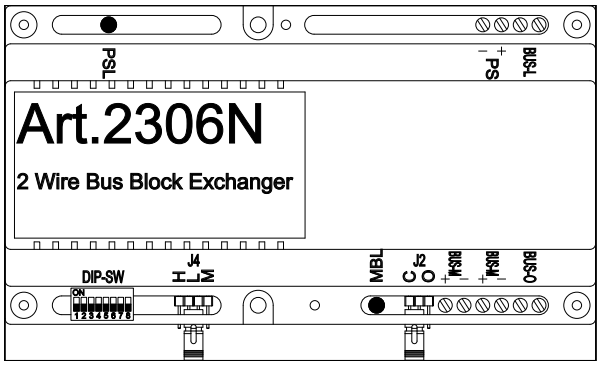

Fig. 1

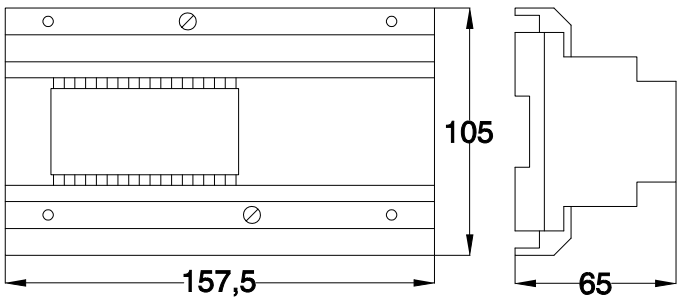

Fig. 2

DESCRIPTION

The block exchanger is used on 2 level systems where there are main entrances that call every apartment and local block entrances that only call the apartments within that block. One Art. 2306N is required for each block.
The BUS line coming from the main entrance (which may be digital or traditional panels) must be connected to the **BUS-M** input (there are two sets of **BUS-M** connections to allow the **BUS-M** to be connected to several Art. 2306N units in series. **BUS-O** connects to the riser towards the apartments and BUS- L connects to the local block door panels. The function of the switcher is to connect the **BUS-O** to either the **BUS-L** or the **BUS-M** depending on the source of the call.
Jumpers **J4** adjusts the amplification on the main bus (**BUS-M**). High medium and low amplification is available. Jumper **J2** is an end of line jumper for the main bus (**BUS-M**). This should be in the O position for all but the last Art. 2306N (In order of connection) while on the last it should be in the **C** position. The 8 way dip-switch is used to set the exchangers address (from 1 to 8 using switches 1 to 4) and the door panel type at the main entrance (digital or traditional on switch 8). Switches 5-7 are not used at the moment. The **PS** connection is for the power supply which will power the exchanger and the devices connected to it. There are two LED's for diagnostic purpose to check correct connections at the **BUS-M** and **PS** inputs.
The Art. 2306N makes each block a stand-alone installation (each block may work separately but also communicate with a communal entrance(s)) Each block may have up to 100 users and each system can have a maximum of eight blocks allowing an installation to reach up to 800 users (Note: When using traditional main panels the limit is 80 users).

CONNECTION TERMINALS, LEDS AND JUMPERS	
DIP-SW	8 Way dip switch used to set the exchanger address (switches from 1 to 4) and the main door panel type (switch 8)
J4	BUS-M input amplification (3 levels: H = High, L = Low and M = Medium)
MBL	BUS Master LED: if the LED is switched OFF, disconnect the mains and reverse the wires connected at the BUS-M input – **N.B. Disconnect the link between each exchanger and starting with the one connected to the main panel(s) check the LED. If it is off, power down and reverse the cables then connect the next exchange and repeat the LED check until all LED's are on**
J2	BUS-M line termination (C = Closed, O = Open): when more than one exchanger is used move J2 to **"C"** position only on the last exchanger in order of connection and leave the others in the **"O"** position.
BUS-M	Main BUS input from the main entrance or from another block exchanger (Two sets on terminals for pass through connections to the next Art. 2306N)
BUS-O	Bus output to intercoms/videointercoms of the block of the exchanger
BUS-L	Local BUS input from the door panel relative to the block (or from a Art 2301N if the block has more than one door panel)
PS	Power supply input: for blocks with 1 door panel and a maximum of 20 videophones use the Art. 2321, use the Art. 2321/P in all other cases
PSL	Power Supply LED: if switched ON means the polarity is correct at the PS input **(if the LED is switched OFF, disconnect the system from the mains and reverse the connection of the wires at the PS input)**

PROGRAMMING

The 8 way dip-switch enables the setting of the device address and the main door panel type selection.

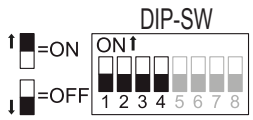

Switch status				Block Address	With Sw8 = ON Address
1	2	3	4		
ON	OFF	OFF	OFF	1	1..10
OFF	ON	OFF	OFF	2	11..20
ON	ON	OFF	OFF	3	21..30
OFF	OFF	ON	OFF	4	31..40
ON	OFF	ON	OFF	5	41..50
OFF	ON	ON	OFF	6	51..60
ON	ON	ON	OFF	7	61..70
OFF	OFF	OFF	ON	8	71..80

When the block is set to work with a main door panel of traditional type (Art. 4303N), switch 8 on the Art. 4303N must be set to ON (Main entrances only). Each block can have a maximum of 10 apartments and the range of the addresses for each block is limited depending on the Art. 2306N address (i.e. the intercoms/videophones/relay connected to the block with Art. 2306N address 1 have apartment addresses between 1 & 10, block with Art. 2306N address 3 must have apartment addresses between 21 and 30 etc).

Switch status	Main door panel type
OFF*	Digital main door panel (Art. 4302, Art. 4302V, Art. 4302R, Art. 4302RV)
ON	Traditional main door panel (Art. 4303)

* On the digital panels connected to the main bus (BUS-M) enable the "main" mode in the programming menu. When "main" mode is enabled the user programming requests to enter the block address in addition to the device (intercom/videophone/relay) address.

CONTROLS

Jumpers J4 and J2 are used to adjust the signal amplification and the termination of the main BUS (BUS-M).

J4 BUS-M AMPLIFICATION	
Position	**Amplification level**
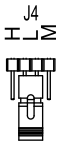	Low
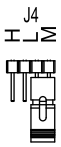	Medium
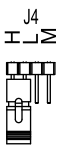	High

J2 BUS-M TERMINATION	
Position	**Termination**
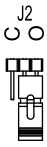	Disabled
	Enabled

SPECIFICATION

Housing/Mounting: 9 Module A Type DIN box / DIN Bar or directly to the wall
Push Buttons: N/A
Programming: By 8 way dip-switch
Controls: Amplification (J4) and termination (J2) main bus line **BUS-M**
Power Supply: From specific power supply
Working Temperature: -10 +50°C

Art. 2305 Extension Relay for VX2300 digital systems

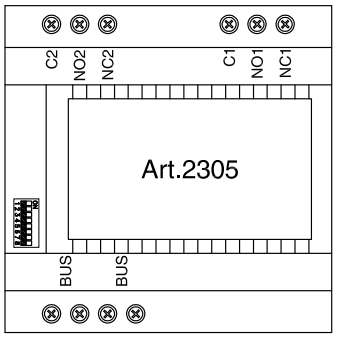

Fig. 1

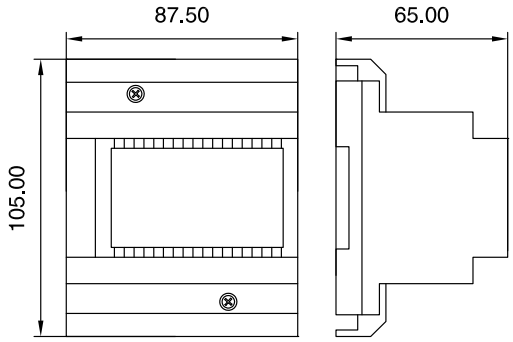

Fig. 2

DESCRIPTION

This unit can be connected directly to the bus and has two operating modes: general purpose extension relay and apartment extension relay for additional sounders. As general purpose extension relay, the built-in relays are controlled by the relevant button of the intercom or videophone while as extension sounder relay, relay one will operate on each ring and relay two will operate for the duration of the call.

CONNECTION TERMINALS & DIP-SWITCHES		
BUS	Input/Output bus connection terminals	
BUS	Input/Output bus connection terminals	
C2	Relay 2 common contact	**Max 24Vac/dc 5A**
NO2	Relay 2 normally open contact	
NC2	Relay 2 normally closed contact	
C1	Relay 1 common contact	
NO1	Relay 1 normally open contact	
NC1	Relay 1 normally closed contact	
DIP-SW	8 way dip-switch to set the relay operating mode	

PROGRAMMING

The operating mode is set by switch 8 as shown below. Note: After making changes to the dip-switch settings it is necessary to disconnect it from the bus (or power the system down) and then reconnect before the changes will take affect.

GENERAL PURPOSE EXTENSION RELAY – SWITCH 8 = OFF

When the unit is set as general purpose extension relay, switches 1 to 6 are used to set the relays addresses and activation times.

Switches		Relay 1,2 Addresses
1	2	
OFF	OFF	1,2
ON	OFF	3,4
OFF	ON	5,6
ON	ON	7,8

Switches		Relay 1 time
3	4	
OFF	OFF	2 seconds
ON	OFF	4 seconds
OFF	ON	16 seconds
ON	ON	32 seconds

Switches		Relay 2 time
5	6	
OFF	OFF	2 seconds
ON	OFF	4 seconds
OFF	ON	16 seconds
ON	ON	32 seconds

Switch 7 is not used.

For example if switch 1 is set to ON and switch 2 is set to OFF (addresses 3 & 4), pressing the "dot" button on the intercom (or "double dot" on the videophone) 3 times will operate relay one while pressing 4 times will operate relay two.

EXTENSION SOUNDER RELAY – SWITCH 8 = ON

When the unit is set in this mode, switches from 1 to 7 (8 is not used but set to on) are used to set the address of the unit: the address of the unit is set to the same address as the videophone or intercom it that apartment (refer to intercom/videophone SW1 settings). When the apartment is called, relay 1 will operate 4 times (once for each ring) while relay 2 will energise for the duration of the call (Approx. 60 seconds). The relays revert to the de-energised state if the call is cancelled or the user ends the call.

SPECIFICATION

Housing/Mounting: 5 Module A Type DIN box / DIN bar or directly to the wall
Push Buttons: N/A
Programming: Yes, carried out by the 8 way dip-switch
Controls: N/A
Power Supply: from the bus
Working Temperature: -10 +50°C
Dry contacts relay: Max 24Vac/dc 5A

Art. 2380 Interface "2 Wire" to "4+1" audio system

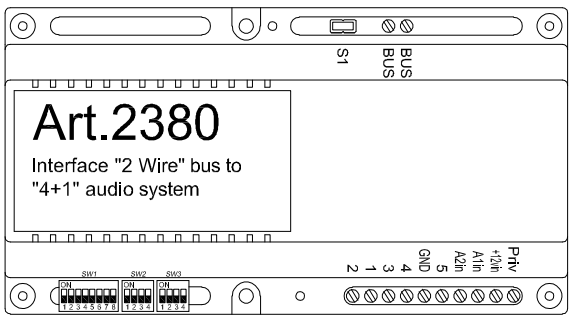

Fig. 1

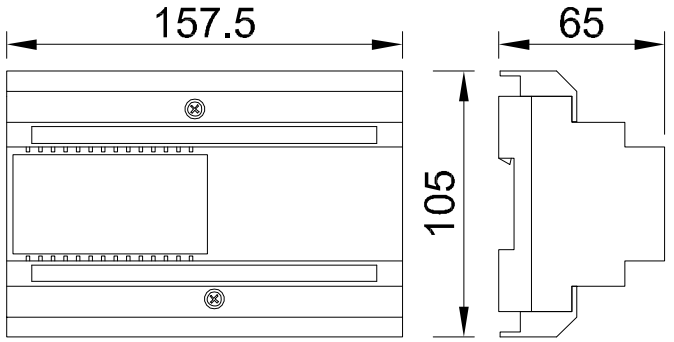

Fig. 2

DESCRIPTION

Interface to connect 4+ 1 audio devices to the VX2300 "2 Wire" Bus (for example the Art. 380 telephone interface). Using the items listed above (Art. 380) it is possible to use a conventional household telephone as a standard intercom.
The operating mode of the telephone depends on the connected device and on the connections made, refer to the instructions of the Art. 380.

DIP-SWITCHES AND JUMPERS (FIG. 1)	
SW1	Switches from 1 to 7 are used for unit address (from 1 to 127 binary coded). Last switch (8) is not used
SW2	Switches 1,2 and 3 are used to set privacy duration time. Switch 4 is used to set the "Priv" signal operating mode
SW3	Switches 1,2 and 3 are used for intercommunication settings. Switch 4 is not used
S1	Impedance terminator. The jumper must be normally closed. When more videophones/intercoms are connected in parallel (from a peripheral to another and so on until the last) the jumper must be open for all the intercoms except for the last following the order of connection.

PROGRAMMING

After each programming operation carried out through dip-switches or jumpers it is necessary to temporary disconnect the device from the BUS or from the power supply if locally powered.

SW1 - DEVICE ADDRESS

SWITCHES STATUS							BINARY CODE – DECIMAL VALUE							ADDRESS
7	**6**	**5**	**4**	**3**	**2**	**1**	**64**	**32**	**16**	**8**	**4**	**2**	**1**	
OFF	OFF	OFF	OFF	OFF	OFF	ON	0	0	0	0	0	0	1	1
OFF	OFF	OFF	OFF	OFF	ON	OFF	0	0	0	0	0	1	0	2
OFF	OFF	OFF	OFF	OFF	ON	ON	0	0	0	0	0	1	1	3
OFF	OFF	OFF	OFF	ON	OFF	OFF	0	0	0	0	1	0	0	4
OFF	ON	OFF	OFF	ON	OFF	ON	0	1	0	0	1	0	1	37
ON	ON	OFF	OFF	OFF	ON	ON	1	1	0	0	0	1	1	99

The table above shows how to set the address of the device. Considering that ON = 1 and OFF = 0, multiply each digit for the relevant decimal weight then sum the values obtained to get the address: E.g. as highlighted in the table OFF,ON,OFF,OFF,ON, OFF,ON in binary is equal to 0100101 then multiplying each digit for the relevant decimal weight you obtain the address that is 37.

Note: the maximum number of units allowed is 100 but the address of each unit can be a value between 1 and 127.

SW2 - PRIVACY DURATION TIME					
SWITCHES STATUS				**PRIVACY MODE**	**PRIVACY DURATION**
1	**2**	**3**	**4**	**(SWITCH 1)**	**(SWITCHES 2,3)**
OFF	OFF	OFF		The privacy duration time is set by switches 2 and 3. When enabled the privacy service will be disabled when the set time expires or the switch is moved back to off.	15 minutes
	ON	OFF			1 hour
	OFF	ON			4 hours
	ON	ON			8 hours
ON				No privacy time expiration: the privacy service is enabled or disabled only by the slide switch.	
			OFF	The "Priv" terminal works as an open collector output to signal the status of the privacy service. When the service is enabled the "Priv" output shorts to ground.	
			ON	**This mode must be set when the Art. 2380 is connected in parallel (with the same address) to one or more intercoms/videophones. Make a link between terminals "Priv" and "2".**	

SW3 - INTERCOMMUNICATION SETTINGS					
SWITCHES STATUS				**INTERCOMMUNICATION MODE**	**UNIT EXTENSION**
1	**2**	**3**	**4**	**(SWITCH 1)**	**(SWITCHES 2,3)**
OFF	OFF	OFF		Intercommunication allowed between units (same unit address) inside the same flat. To call an extension pick up the handset then press the "door open" button as many times as the extension value (Eg. extension 2 two times, 3 three times etc). **Each intercom/videophone in the same apartment must have a different extension address, the master address must always be set except when one of the intercom/videophone is set for apartment intercommunication (i.e. in a 3 intercom/videophone installation, one of the intercom/videophone must have the extension address 1 while the others must have different addresses).**	1 (master)
	ON	OFF			2 (slave)
	OFF	ON			3 (slave)
	ON	ON			4 (slave)
ON				Intercommunication allowed between videophones (different apartment). To call an extension pick up the handset then press the "door open" button as many times as the address value (Eg. extension 10 ten times, 12 twelve times etc)	
			OFF	The operation is not altered.	
			ON	The Art. 2380 delays of 20 seconds the call toward the "4+1" interface to which is connected the Art. 380. During a call, If the Art. 2380 is in parallel connection with an intercom or a videophone, answering from the intercom/videophone stops the call toward the "4+1" interface.	

NOTE: Extension 1 is mandatory. On systems with more than one device in an apartment, each device must have a unique extension ID.

On installations where there are more than one intercom/videophone in the same apartment and intercommunication between different apartments is required, only one intercom/videophone may be set with this function (SW3.1=ON, SW3.2=OFF, SW3.3=OFF). The other intercom/videophones in the apartment must be set for local intercommunication with extension addresses "2-4" (slaves). From the intercom/videophone set for intercommunication with other apartments it will be not possible to intercommunicate within the apartment but slave extensions 2-4 will be able to intercommunicate with each other.

SIGNALS ON CONNECTION TERMINALS	
BUS	BUS connection terminals
BUS	
2	Speech line in
1	Speech line out
3	Speech ground
4	Call output
GND	Ground
5	Active low input "door open" command
A2in	Auxiliary active low input 2. When active (0V) switches the status of privacy service
A1in	Auxiliary active low input 1. When active (0V) the relay with address 1 of the Art. 2305 if installed in the system will activate
+12Vout	+12Vdc Output
Priv	With SW2.4 = OFF, it works as an open collector output that signals the privacy service status. Internal link to ground when the privacy service is active
	With SW2.4 = ON, required setting when the Art. 2380 is in a parallel (same address) connection with other devices it must be linked to terminal two

SPECIFICATION

Housing/Mounting: 9 Module A Type DIN boxl
Push Buttons: N/A
Programming: Yes, carried out through dip-switches
Controls: N/A
Power Supply: Supplied from the BUS
Working Temperature: -10 +50°C

Art. 2321-2321/P Power supplies for VX2300

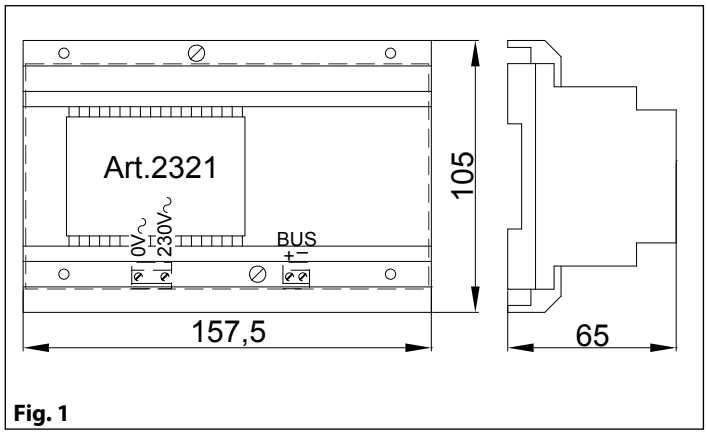

Fig. 1

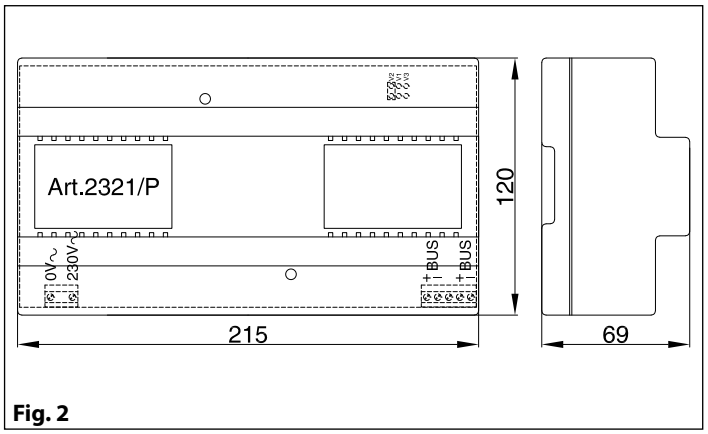

Fig. 2

DESCRIPTION

These two power supplies are specifically designed for the VX2300 digital system. The Art. 2321 can be used for systems with 1 entrance up to 20 users while the Art. 2321/P is for systems with more than 1 entrance and up to 100 users.

CONNECTION TERMINALS AND JUMPERS	
0	Mains input
~230V	
BUS +	BUS terminals
BUS –	
BUS +	BUS terminals (only Art. 2321/P)
BUS –	
V1	Jumper to adjust the output voltage (only Art. 2321/P). V1=Low, V2=Medium, V3=Maximum. Set to maximum (V3) when the unit is used together with Art. 2301N, otherwise leave in a low or medium position.
V2	
V3	

CONNECTION TO MAINS AND POWER SUPPLY MOUNTING INSTRUCTIONS

The system must be installed according to national rules in force, in particular we recommend to:

- Connect the system to the mains through an **all-pole circuit breaker** which shall have contact separation of at least 3mm in each pole and shall disconnect all poles simultaneously;
- The **all-pole circuit breaker** shall be placed for easy access and the switch shall remain readily operable.

POWER SUPPLY INSTALLATION

- Remove the terminal side covers by unscrewing the retaining screws;
- Fix the power supply to a DIN bar or directly to the wall using two expansion type screws;
- Switch off the mains using the circuit breaker mentioned above and then make the connections as shown on the installation diagrams;
- Check the connections and secure the wires into the terminals;
- Replace the terminal covers and fix them using the relevant screws;
- When all connections are made, restore the mains.

SPECIFICATION

Housing/Mounting: 9 Module A Type DIN box (Art. 2321) – 12 Module A Type DIN box (Art. 2321/P) / DIN Bar or directly to the wall
Push Buttons: N/A
Programming: N/A
Controls: Voltage amplification (3 levels)
Power Supply: 230Vac
Working Temperature: -10 +50°C

ART. 2321 - ELECTRICAL DATA

Mains voltage: 230Vac ~ 50/60Hz
Output voltage: 32Vdc 0.8A

ART. 2321/P - ELECTRICAL DATA

Mains voltage: 230Vac ~ 50/60Hz
Output voltage: 35Vdc 1.5A

Art. 2322 Power supply converter from BUS line to 12 Vdc

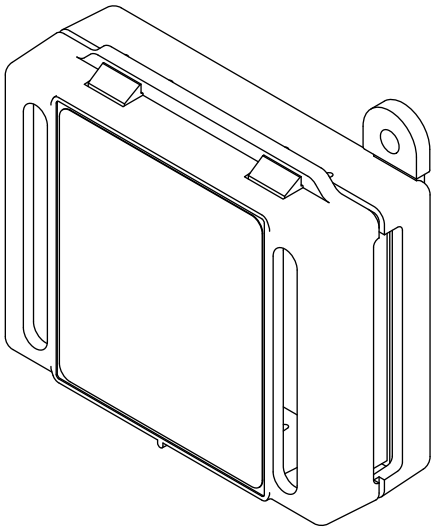

Fig. 1

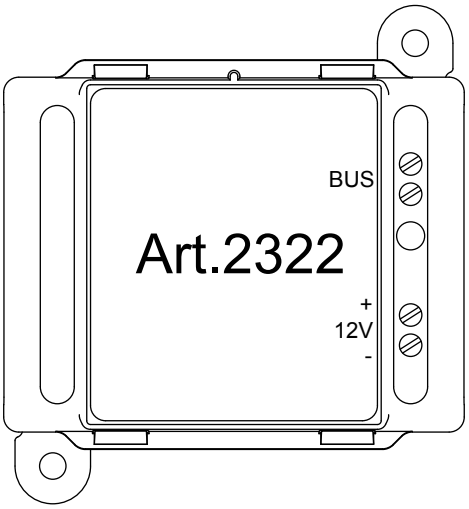

Fig. 2

DESCRITPION

When this unit is connected to the BUS line it generates a +12Vdc – 100mA power source. This unit can be used to supply peripherals such as the Art. 4800 or Art. 4800M without the need for an additional power supply.

Please note: The peripherals must not require more than 100mA.

CONNECTION TERMINALS	
BUS	BUS line inputs
BUS	
12V+	12Vdc – 100mA output
12V– (0V)	

TECHNICAL SPECIFICATION

Housing/Mounting: Plastic box 50x60x20mm / direct wall mounting
Push buttons: N/A
Programming: N/A
Controls: N/A
Power supply: Supplied by the BUS line
Working temperature: -10° +50° C

General directions for installation

CABLE TYPES AND CROSS SECTIONAL AREAS

The VX2300 digital system can use several types of cables but depending on their specification will allow different distances up to 400 meters maximum. We do not recommend the use of shielded cables because of the high eddy capacitance. It is also not advised to double up on cables as this will also increase the capacitance. The following table specifies values of resistance, capacitance and maximum distances achievable for several types of cables (capacitance and resistance values are referring to 100 metres of cable).

Cable Type**	Wires Section (mm^2)	Resistance (Ohm) per 100 metres	Capacitance (nF) per 100 metres	*Maximum Distance (metres)
VIDEX CM2	0.50	3.2	8	200m
CAT5 UTP/CW1308	0.22	8	4.9	70m
Std Telephone Cable	0.28	6.5	5.5	100m
Two wire	0.8 / 1	2	6.5	70m

*** The maximum distance represents the maximum distance from power supply. i.e. the cable length between the outdoor station and the power supply or between the power supply and the videophone.**
There are two important characteristics to consider when calculating cable, the resistance and the capacitance. The resistance of the cable from power supply to end point must be less than 10 Ohms and can be calculated from point to point. The capacitance of the cable must not exceed 40nF and is an accumulation of all lengths and branches of the cable. For example: Videx CM2 cable can be used for a maximum distance of 200m from door station to power supply and another 200m from power supply to videophone (400 meters) but this distance may be reduced if the maximum capacitance is reached first.
When using the block exchanger art. 2306 it is possible to exceed the limit of 400m. The 2306 breaks the system into smaller systems or blocks, each block can then achieve the 400m.
For example: in a system with two block exchangers:

- **Using 100m to reach the first block, you can then use up to 300m cable in the block;**
- **Assuming you are using another 50 meters cable to get from the first to the second block, in the second you can use (400-100-50) = 250m.**

**** It is important that the video intercom system cables do not run with mains or other high power cables. Noise from such cables (electromagnetic interference) may cause noises on audio/video and lost functionality. In cases where this advice can not be followed or when existing cables are to be used it will be necessary to carry out tests to assess the quality and functionality of the installation.**

In case of use of cables not in conformity with above specification it is possible to experience deterioration of digital and video signals. We suggest to use twisted cables with maximum resistance of 10 Ohm (between the furthest door station and the furthest videophone) and maximum capacitance of 40nF (this value must be calculated considering all the cables used in the system; the capacitance/metres value is normally specified on the cable package or directly on the cable).

BUS DEVICE SETUP AND VIDEO DISTRIBUTION

- When changing dip switch settings, disconnect the device from the bus for a minimum of 1 minute to allow the unit to fully discharge.
- When you have more than one device in the same apartment, all the devices must be connected to the same video distributor (Art. 317N): this means that you cannot use two video distributors Art. 318 for one apartment where you have 4 videophones/intercoms.
- After completing the installation proceed to testing. The video level gain can be adjusted at several points including distributors, entrance exchanger and bus boosters.

HOW TO CONNECT A LOCAL POWER SUPPLY

The drawing below shows how to connect a local power supply when required (i.e. when you have 4 videophones with the same address that must be switched on at the same time). In both cases switch 4 of SW3 must be set to the ON position.

⚠ NOTE! OBSERVE CONNECTION POLARITIES AS SHOWN IN THE DIAGRAM BELOW.

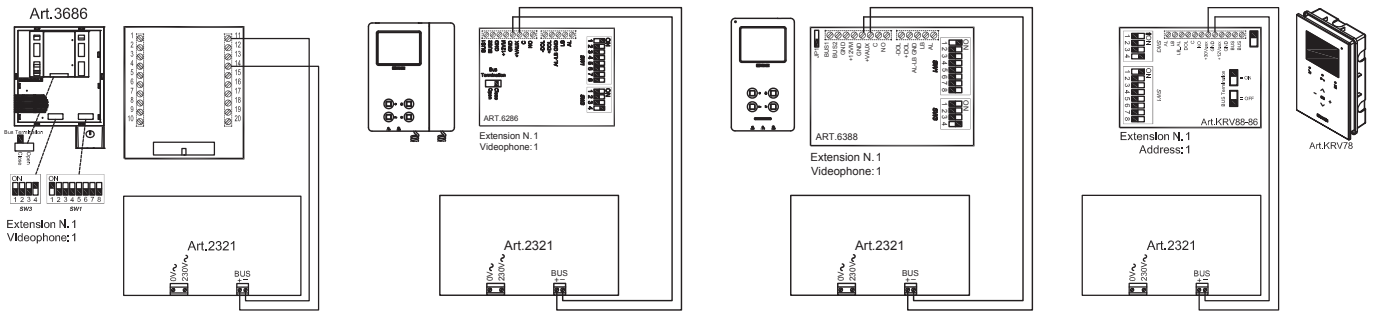

General directions for installation

CABLES LENGTH

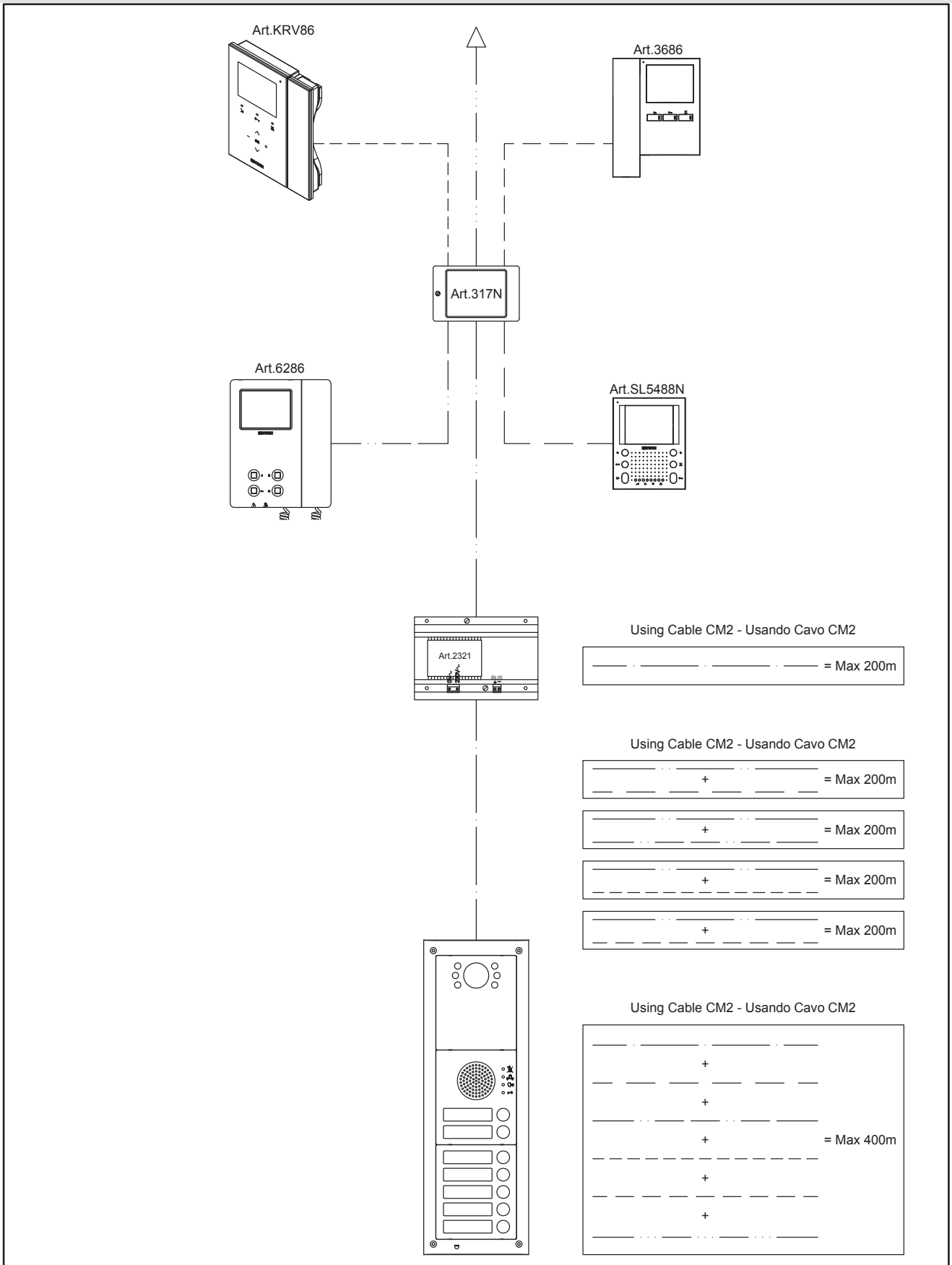

Title: —		Data creazione: 02/07/2014	Foglio 1 / 1
Titolo: —		Data modifica: 02/07/2014	
Videx Electronics S.p.A. Via del Lavoro 1, 63846 Monte Giberto (FM) Phone: +39 0734 631669 - Fax +39 0734 631669	Notes: — Note:	Autore: Marco Rongoni	
		Cod.File: VX2300CL.dwg	

Addresses 1..127 Table for dip-switch banks with ON position down

■ = ON

□ = OFF

Addresses 128..255 Table for dip-switch banks with ON position down

= ON

= OFF

128	144	160	176	192	208	224	240
129	145	161	177	193	209	225	241
130	146	162	178	194	210	226	242
131	147	163	179	195	211	227	243
132	148	164	180	196	212	228	244
133	149	165	181	197	213	229	245
134	150	166	182	198	214	230	246
135	151	167	183	199	215	231	247
136	152	168	184	200	216	232	248
137	153	169	185	201	217	233	249
138	154	170	186	202	218	234	250
139	155	171	187	203	219	235	251
140	156	172	188	204	220	236	252
141	157	173	189	205	221	237	253
142	158	174	190	206	222	238	254
143	159	175	191	207	223	239	255

Addresses 1..127 Table for dip-switch banks with ON position up

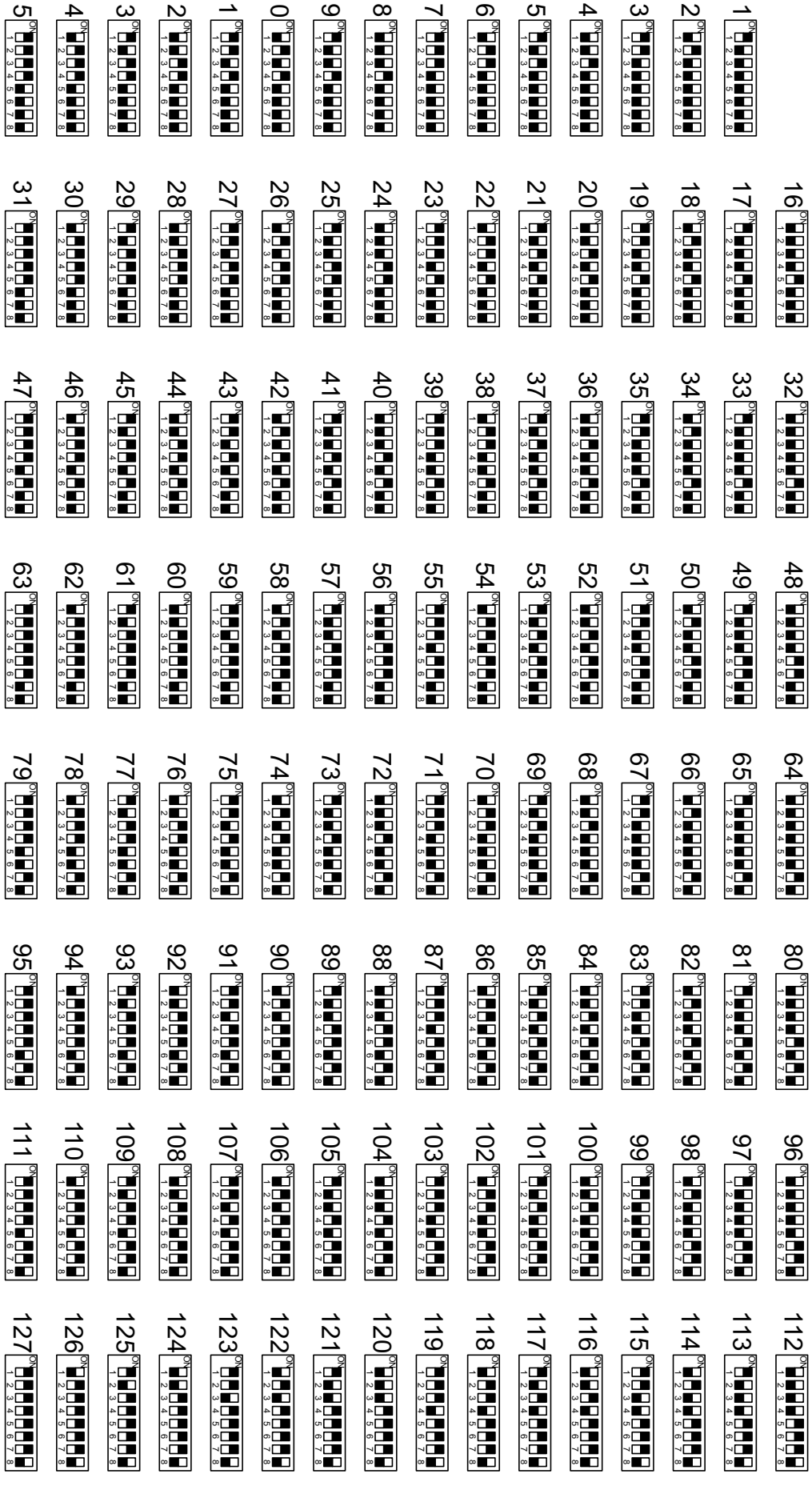

Addresses 128..255 Table for dip-switch banks with ON position up

■ = OFF

□ = ON

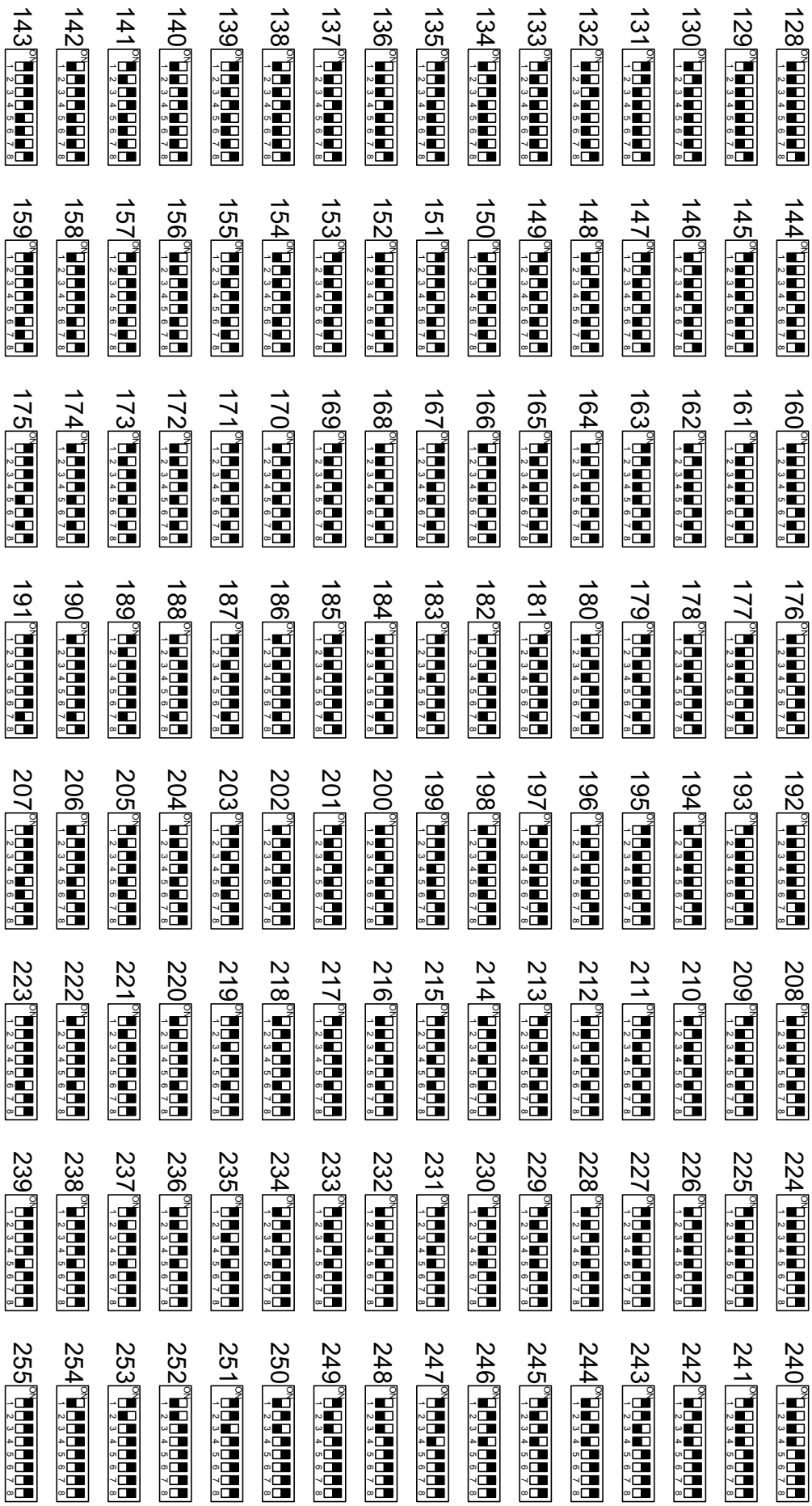

Installation diagrams

1 ENTRANCE 5 USERS AUDIO DOOR ENTRY SYSTEM USING FUNCTIONAL TO DIGITAL DOOR PANEL

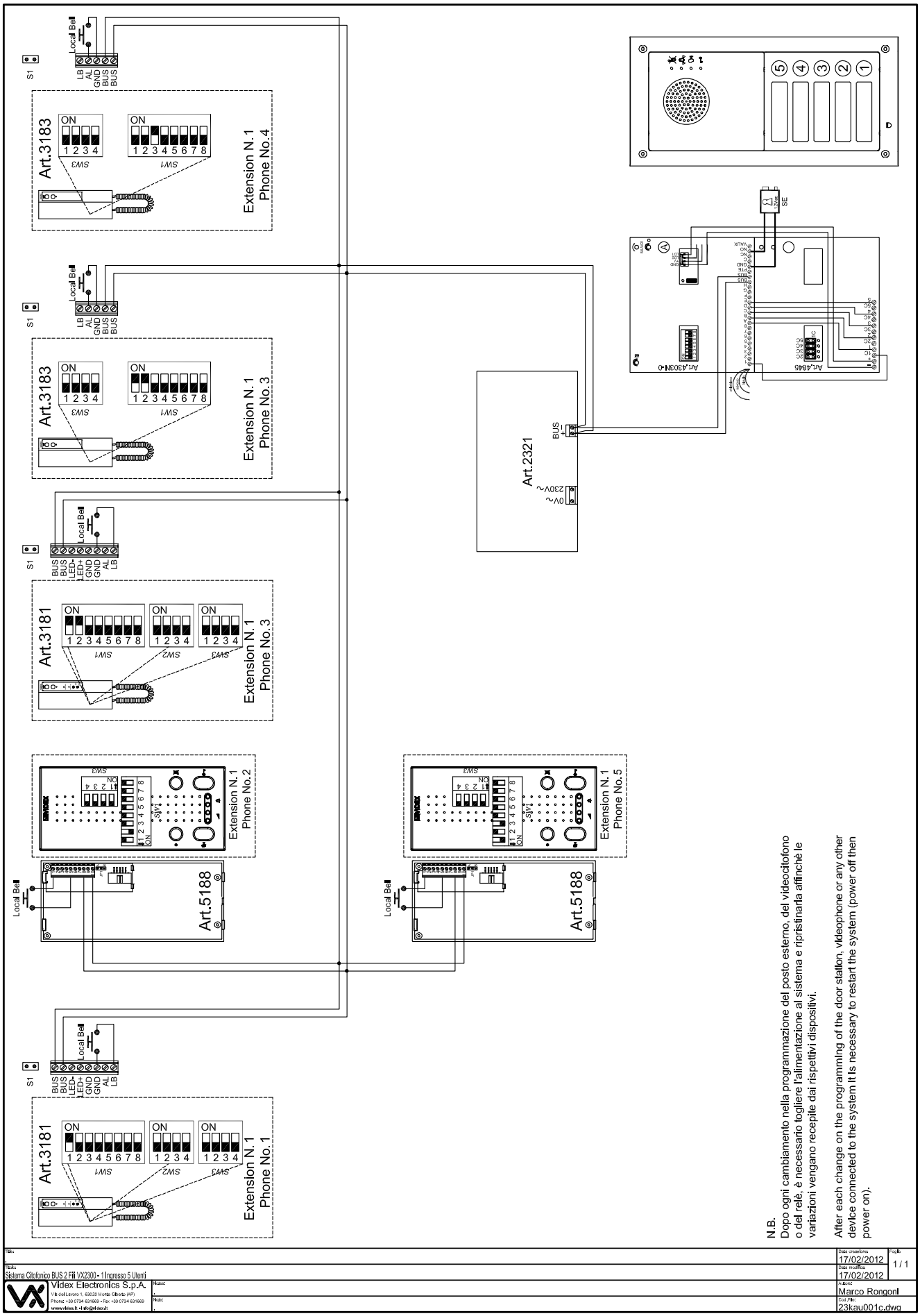

Installation diagrams

1 ENTRANCE "N" USERS VIDEO DOOR ENTRY SYSTEM USING DIGITAL DOOR PANEL

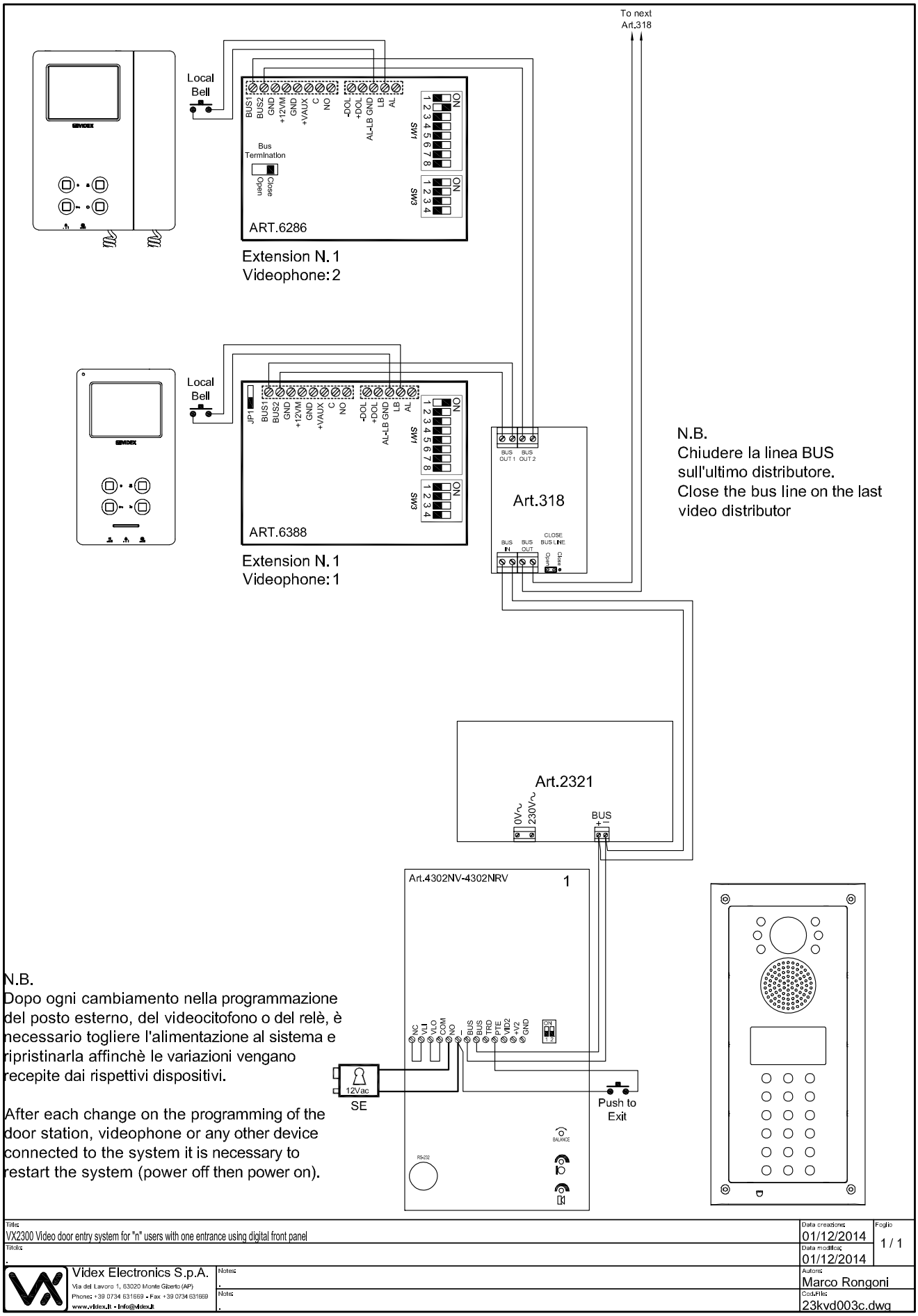

Title: VX2300 Video door entry system for "n" users with one entrance using digital front panel	Data creazione: 01/12/2014	Foglio 1 / 1
Titolo: .	Data modifica: 01/12/2014	
Videx Electronics S.p.A. Via del Lavoro 1, 63020 Monte Giberto (AP) Phone: +39 0734 631669 - Fax +39 0734 631669 www.videx.it - info@videx.it	Notes: . Notes: .	Autore: Marco Rongoni
		Cod.File: 23kvd003c.dwg

VIDEO DOOR ENTRY SYSTEM FOR "N" USERS WITH DIGITAL CODELOCK ART. 4800

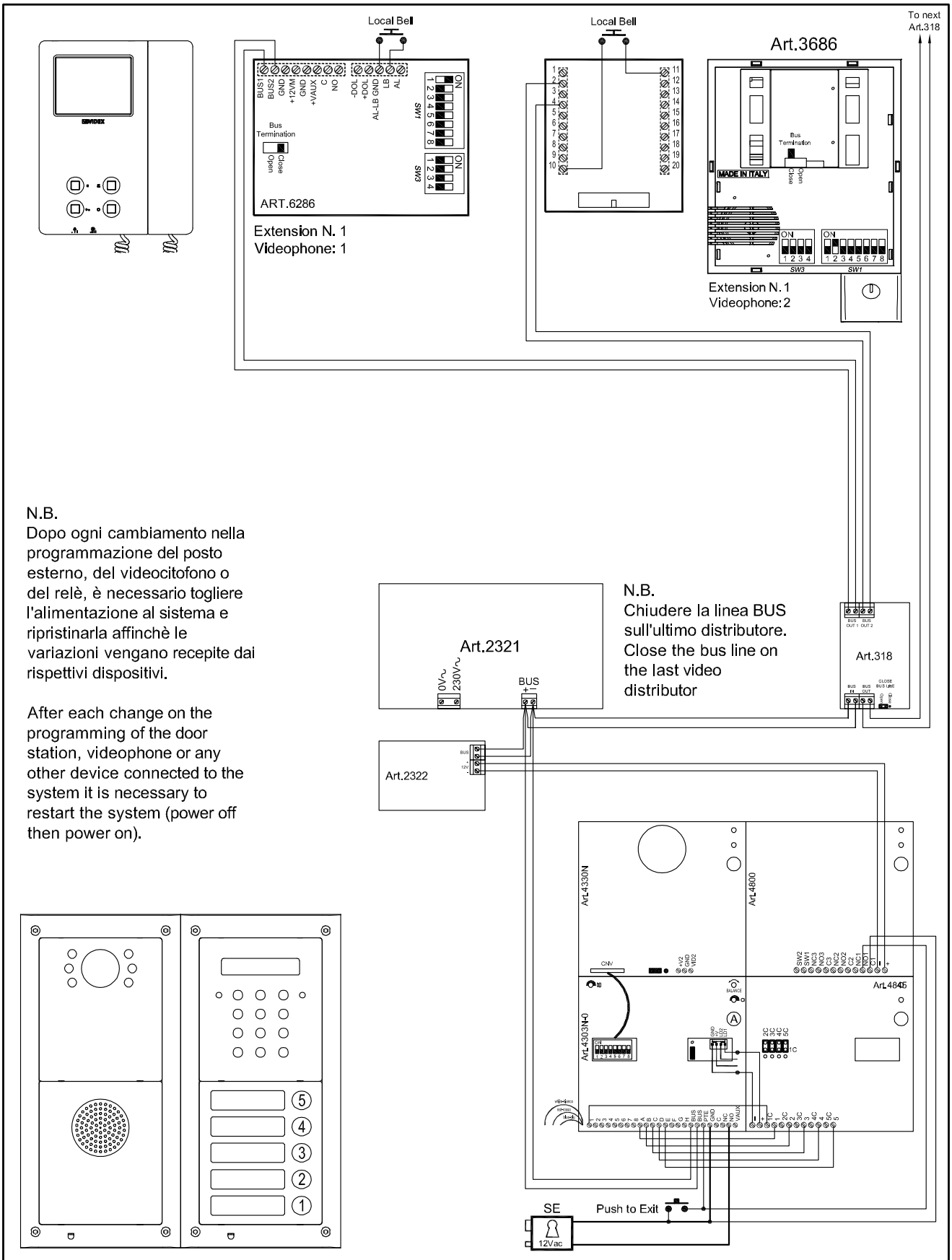

Title: VX2300 1 Entrance Video Door Entry System for "n" users using Functional to Digital Interface plus 4800 codelock	Data creazione: 02/12/2014	Foglio 1 / 1
Titolo: .	Data modifica: 02/12/2014	
Videx Electronics S.p.A. Via del Lavoro 1, 63020 Monte Giberto (AP) Phone: +39 0734 631669 - Fax +39 0734 631669 www.videx.it - info@videx.it	Notes: . Note: .	Autore: Marco Rongoni
		Cod.File: 23kvd001da.dwg

VIDEO DOOR ENTRY SYSTEM FOR "N" USERS WITH BUS BOOSTER ART. 2315

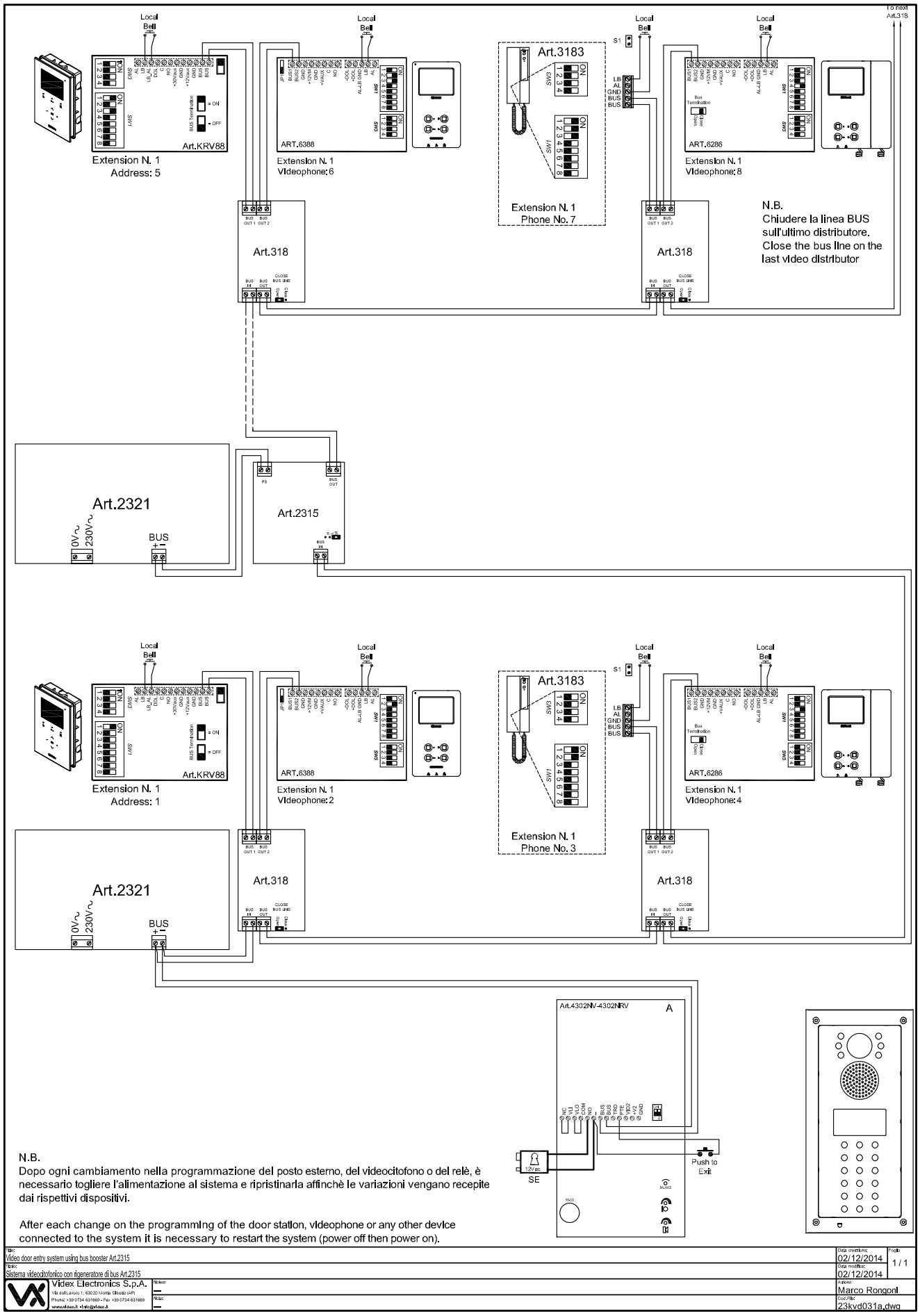

N.B.
Dopo ogni cambiamento nella programmazione del posto esterno, del videocitofono o del relè, è necessario togliere l'alimentazione al sistema e ripristinarla affinchè le variazioni vengano recepite dai rispettivi dispositivi.

After each change on the programming of the door station, videophone or any other device connected to the system it is necessary to restart the system (power off then power on).

Titolo: Video door entry system using bus booster Art.2315	Data inserimento: 02/12/2014	Foglio 1 / 1
Titolo: Sistema videocitofonico con rigeneratore di bus Art.2315	Data modifica: 02/12/2014	
Videx Electronics S.p.A. Via del Lavoro 1, 63020 Monta Giberto (AP) Phone: +39 0734 631669 - Fax +39 0734 631669 www.videx.it - info@videx.it	Nickname: — Filiale: —	Autore: Marco Rongoni Cod./File: 23kvd031a.dwg

1 ENTRANCE 10 USERS VIDEO DOOR ENTRY SYSTEM USING FUNCTIONAL TO DIGITAL DOOR PANEL

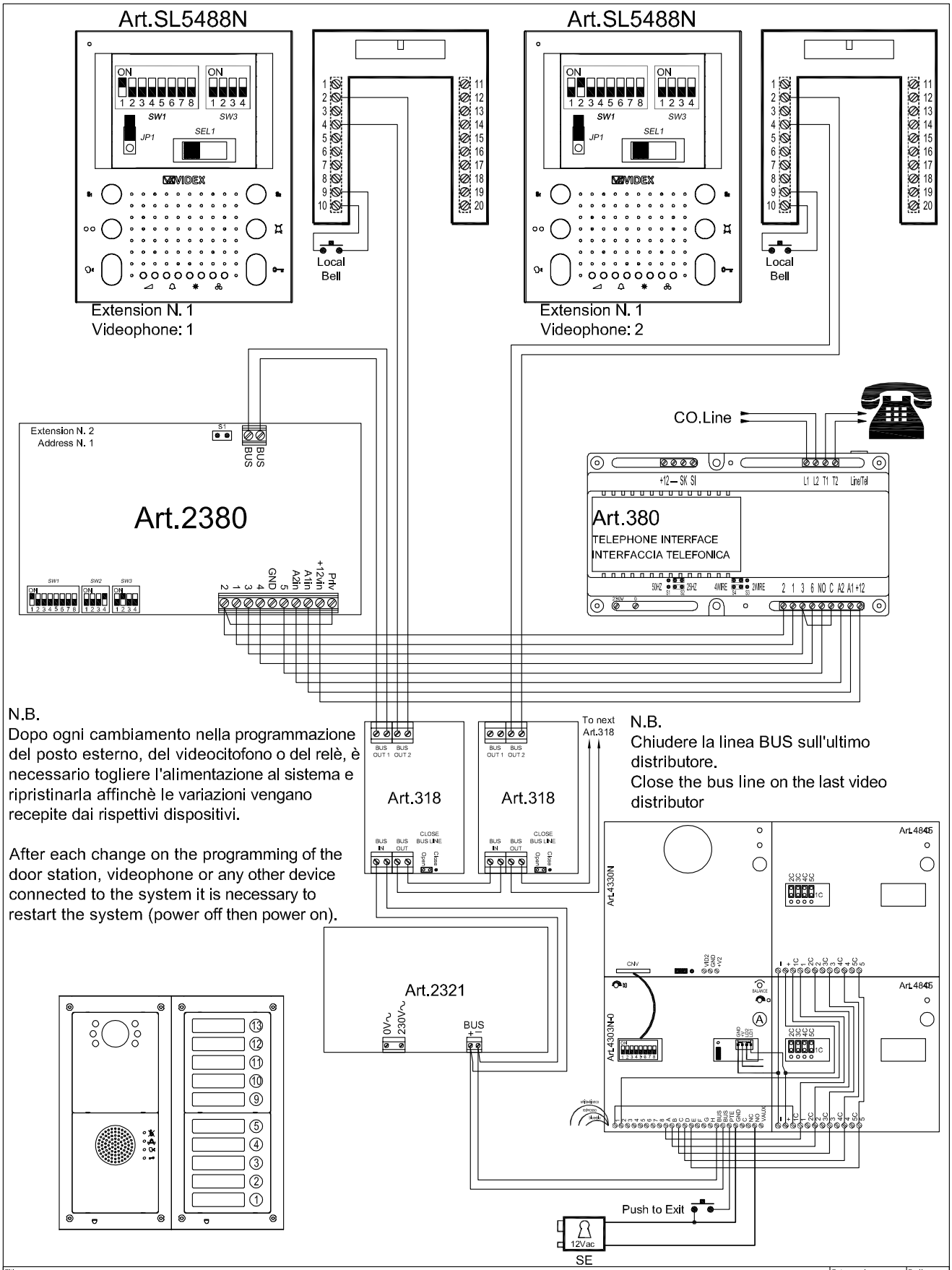

N.B.
Dopo ogni cambiamento nella programmazione del posto esterno, del videocitofono o del relè, è necessario togliere l'alimentazione al sistema e ripristinarla affinchè le variazioni vengano recepite dai rispettivi dispositivi.

After each change on the programming of the door station, videophone or any other device connected to the system it is necessary to restart the system (power off then power on).

N.B.
Chiudere la linea BUS sull'ultimo distributore.
Close the bus line on the last video distributor

Title: VX2300 1 Entrance Video Door Entry System for "n" users using Functional to Digital Interface		Data creazione: 02/12/2014	Foglio 1 / 1
Titolo: .		Data modifica: 02/12/2014	
Videx Electronics S.p.A. Via del Lavoro 1, 63020 Monte Giberto (AP) Phone: +39 0734 631669 - Fax +39 0734 631669 www.videx.it - info@videx.it	Notes: The Art.2380 is in parallel with the videophone 1. When the vieophone 1 is called will ring also the telephone connected to the Art.380	Autore: Marco Rongoni	
	Notes: .	Cod.File: 23kvd001ja.dwg	

1 ENTRANCE 1 USER 4 VIDEOPHONES WITH LOCAL INTERCOMMUNICATION VIDEO DOOR ENTRY SYSTEM USING FUNCTIONAL TO DIGITAL DOOR PANEL

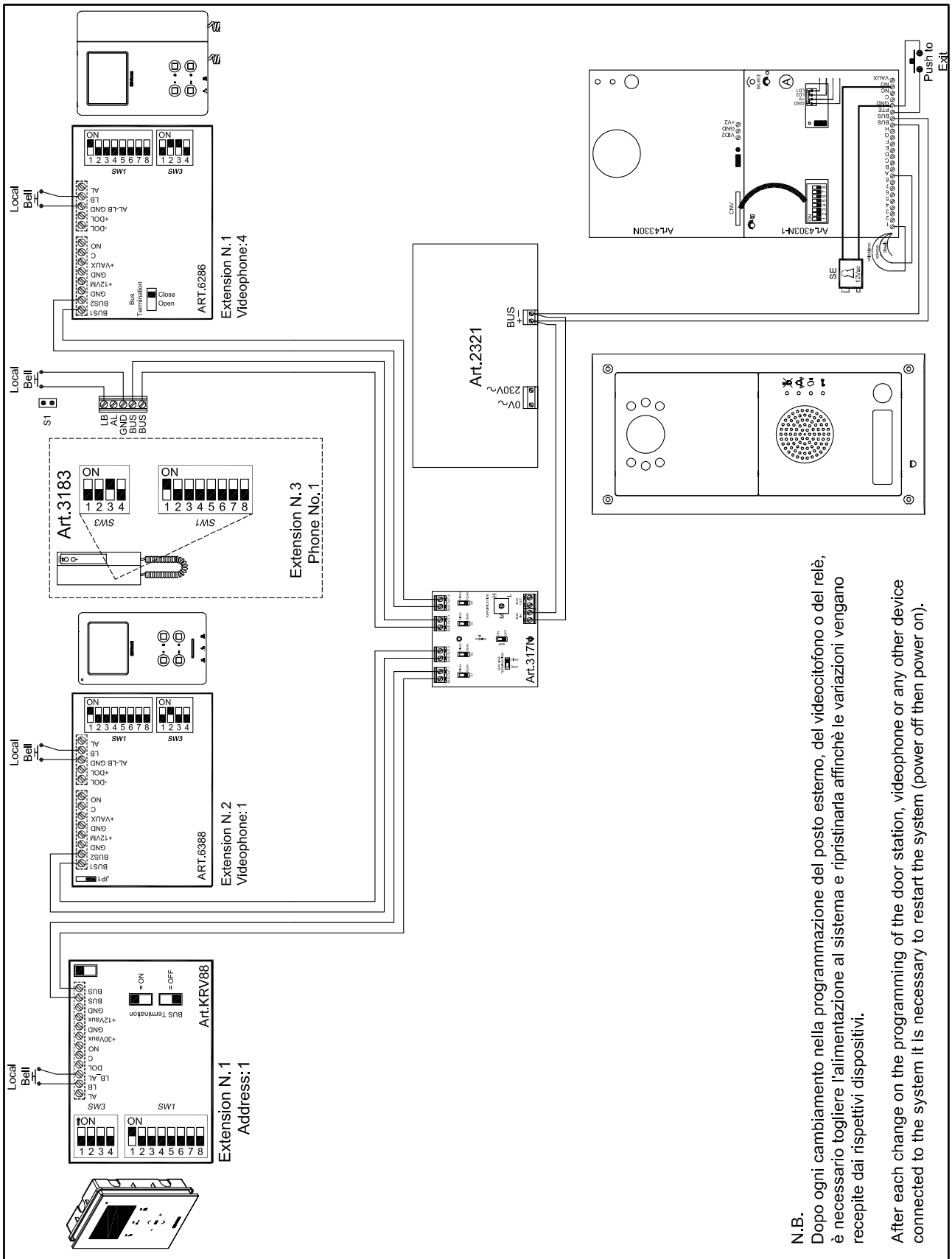

Title: VX2300 1 Entrance Using Functional to Digital Interface Video Door Entry System for "1" user with 4 videophones and local intercommunication	Data creazione: 03/12/2014	Foglio 1 / 1
Titolo: .	Data modifica: 03/12/2014	
Videx Electronics S.p.A. Via del Lavoro 1, 63020 Monte Giberto (AP) Phone: +39 0734 631669 - Fax +39 0734 631669 www.videx.it - info@videx.it	Notes: . Note: .	Autore: Marco Rongoni
		Cod.File: 23kvd004aa.dwg

2 ENTRANCES (ONE AUDIO, ONE AUDIO/VIDEO) 10 USERS AUDIO/VIDEO DOOR ENTRY SYSTEM USING FUNCTIONAL TO DIGITAL DOOR PANEL AND DIGITAL PANEL

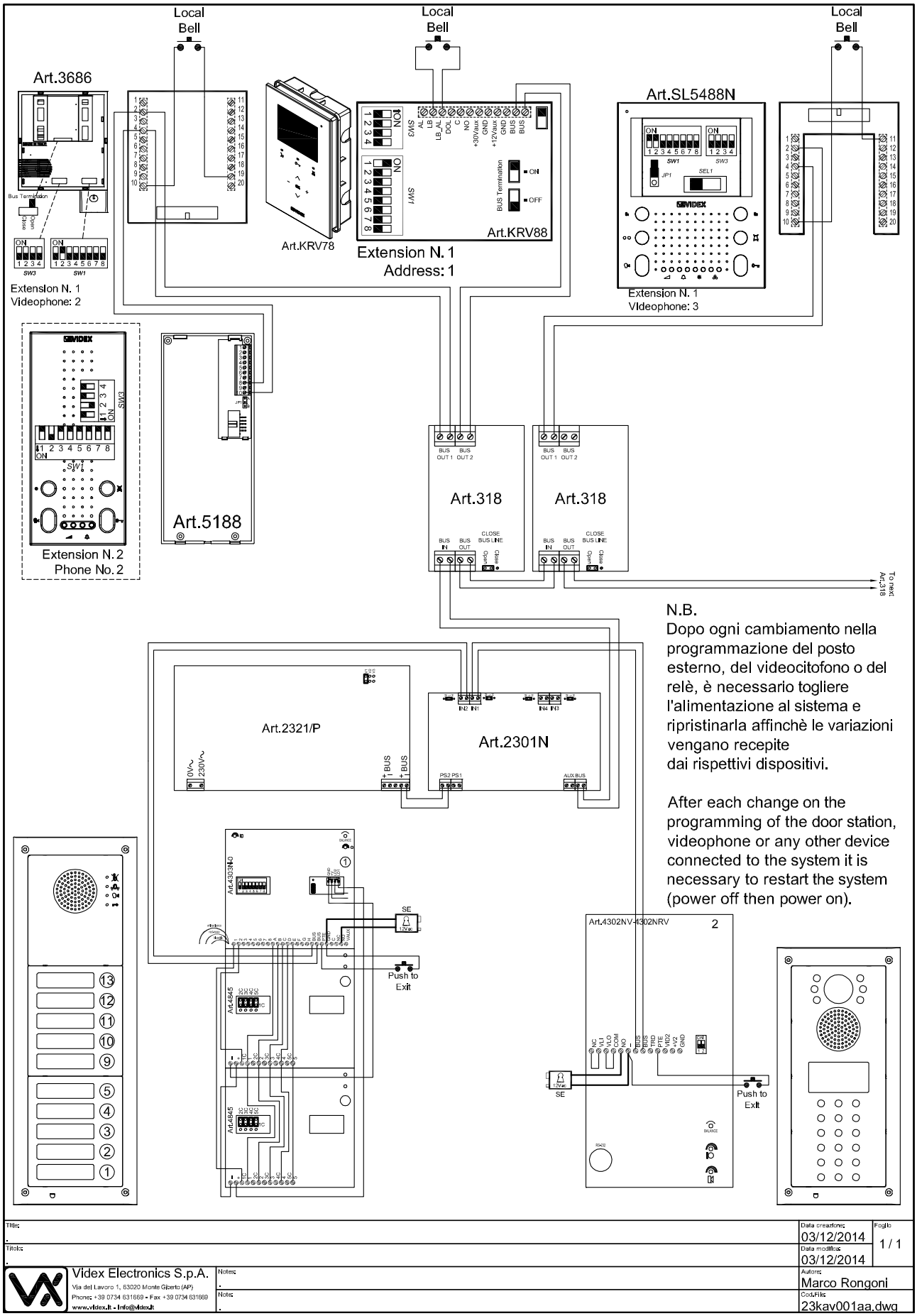

Title: .		Data creazione: 03/12/2014	Foglio 1 / 1
Titolo: .		Data modifica: 03/12/2014	
Videx Electronics S.p.A. Via del Lavoro 1, 63020 Monte Giberto (AP) Phone: +39 0734 631669 - Fax +39 0734 631669 www.videx.it - info@videx.it	Notes: . Note: .	Autore: Marco Rongoni	
		Cod.File: 23kav001aa.dwg	

1 ENTRANCE 3 USER 3 INTERCOMMUNICATING VIDEOPHONES VIDEO DOOR ENTRY SYSTEM USING FUNCTIONAL TO DIGITAL DOOR PANEL PLUS ART. 2305 SET AS BUS RELAY

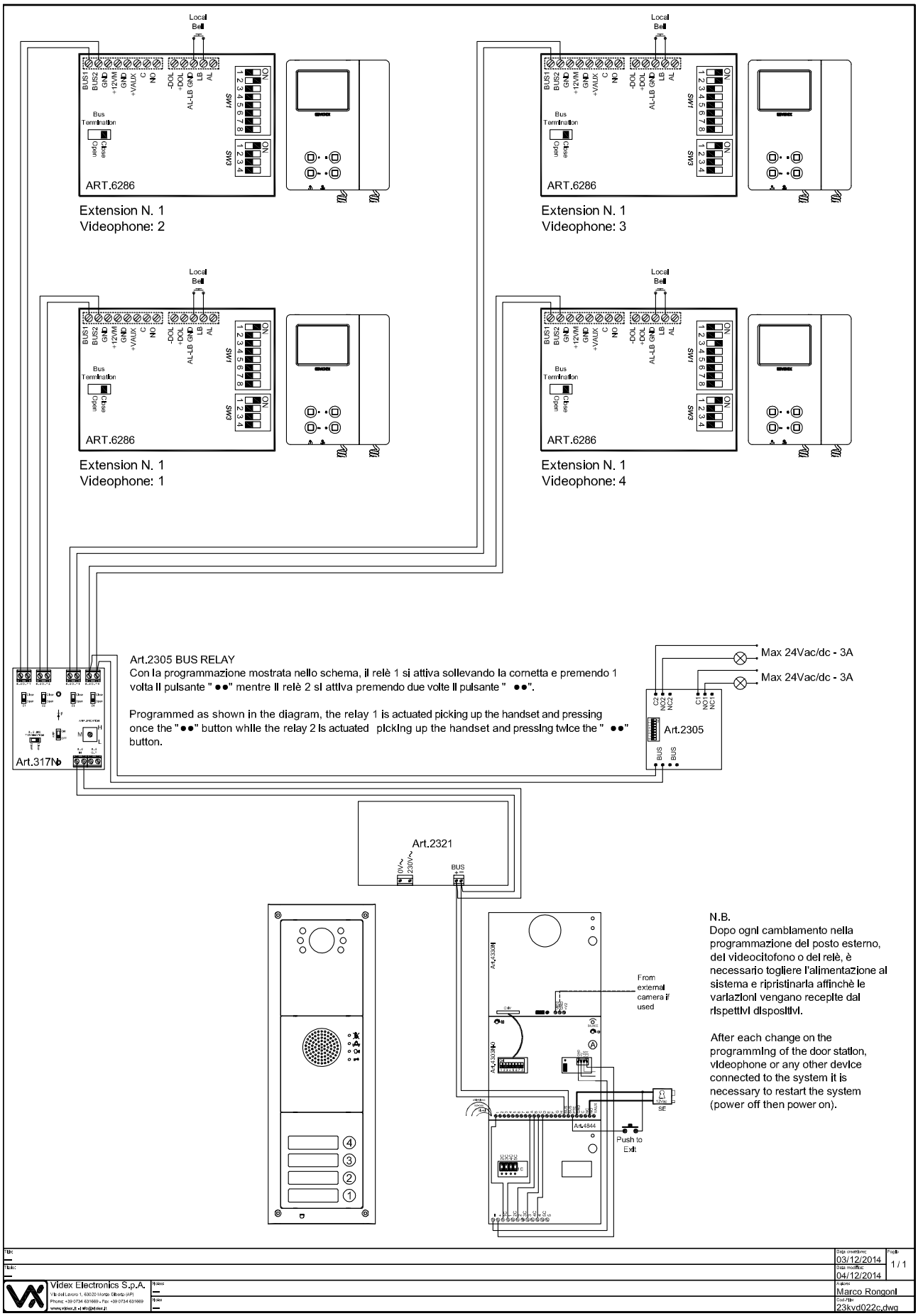

1 ENTRANCE 10 USERS VIDEO DOOR ENTRY SYSTEM USING FUNCTIONAL TO DIGITAL DOOR PANEL SHOWING HOW TO CONNECT THE CAMERA MODULE EXTERNAL VIDEO INPUT PLUS SERVICE PUSH BUTTON TO SWITCH BETWEEN TWO SOURCES

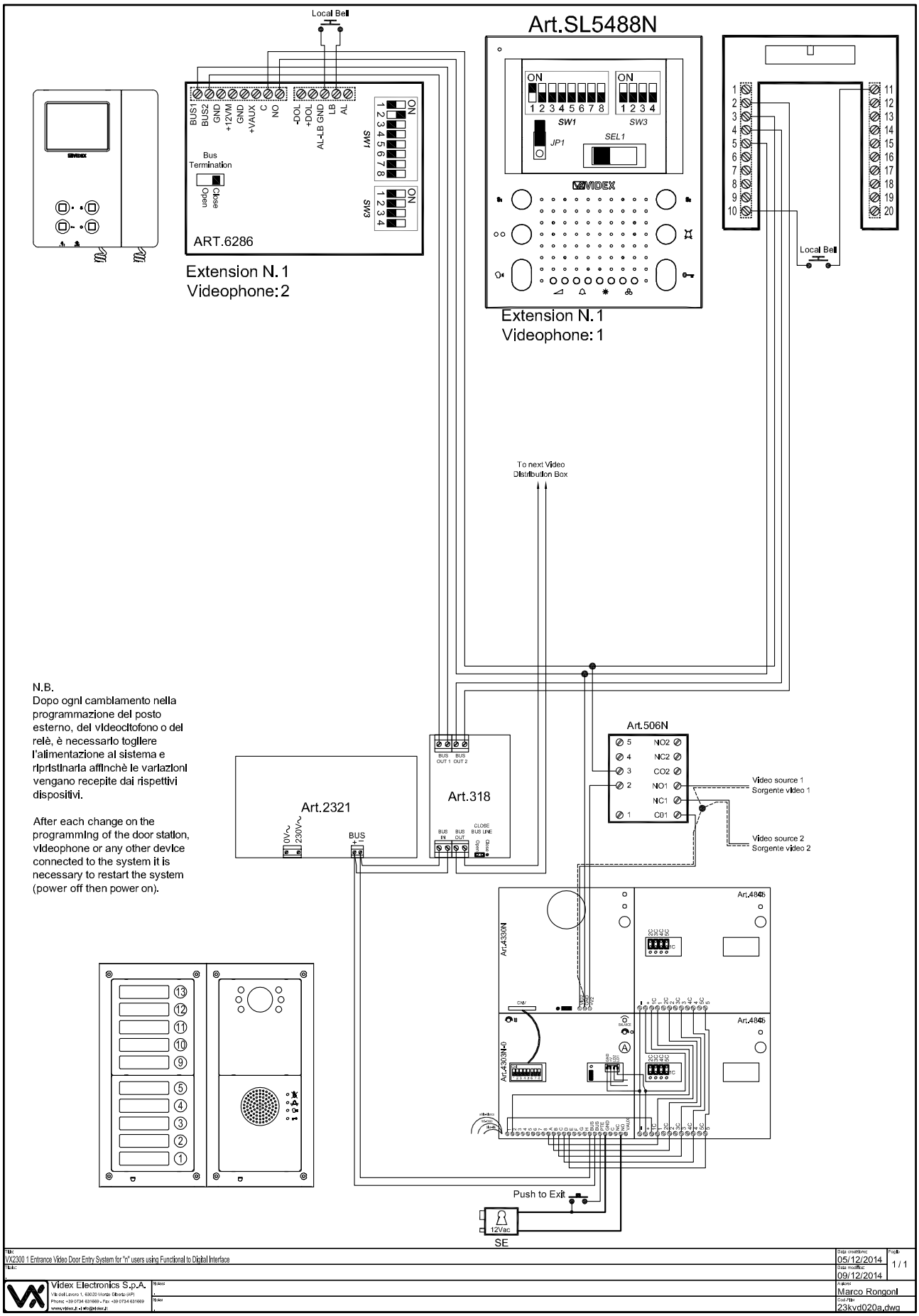

1 ENTRANCE 5 USERS VIDEO DOOR ENTRY SYSTEM USING FUNCTIONAL TO DIGITAL DOOR PANEL SHOWING HOW TO CONNECT THE PASSIVE DISTRIBUTOR ART. 318 – ELECTRIC LOCK SUPPLIED BY AN EXTERNAL PSU

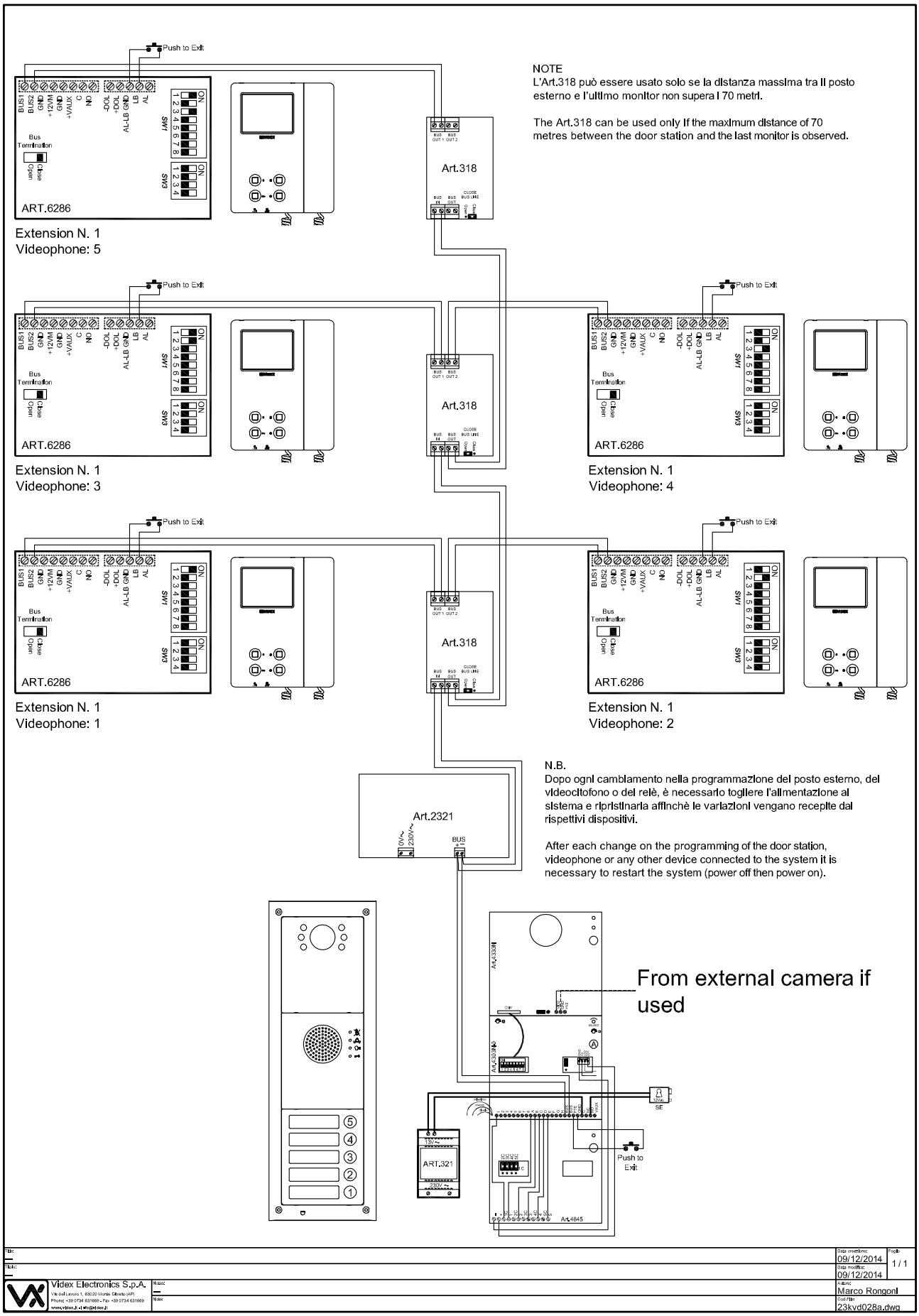

5 ENTRANCES, "4" USERS VIDEO DOOR ENTRY SYSTEM

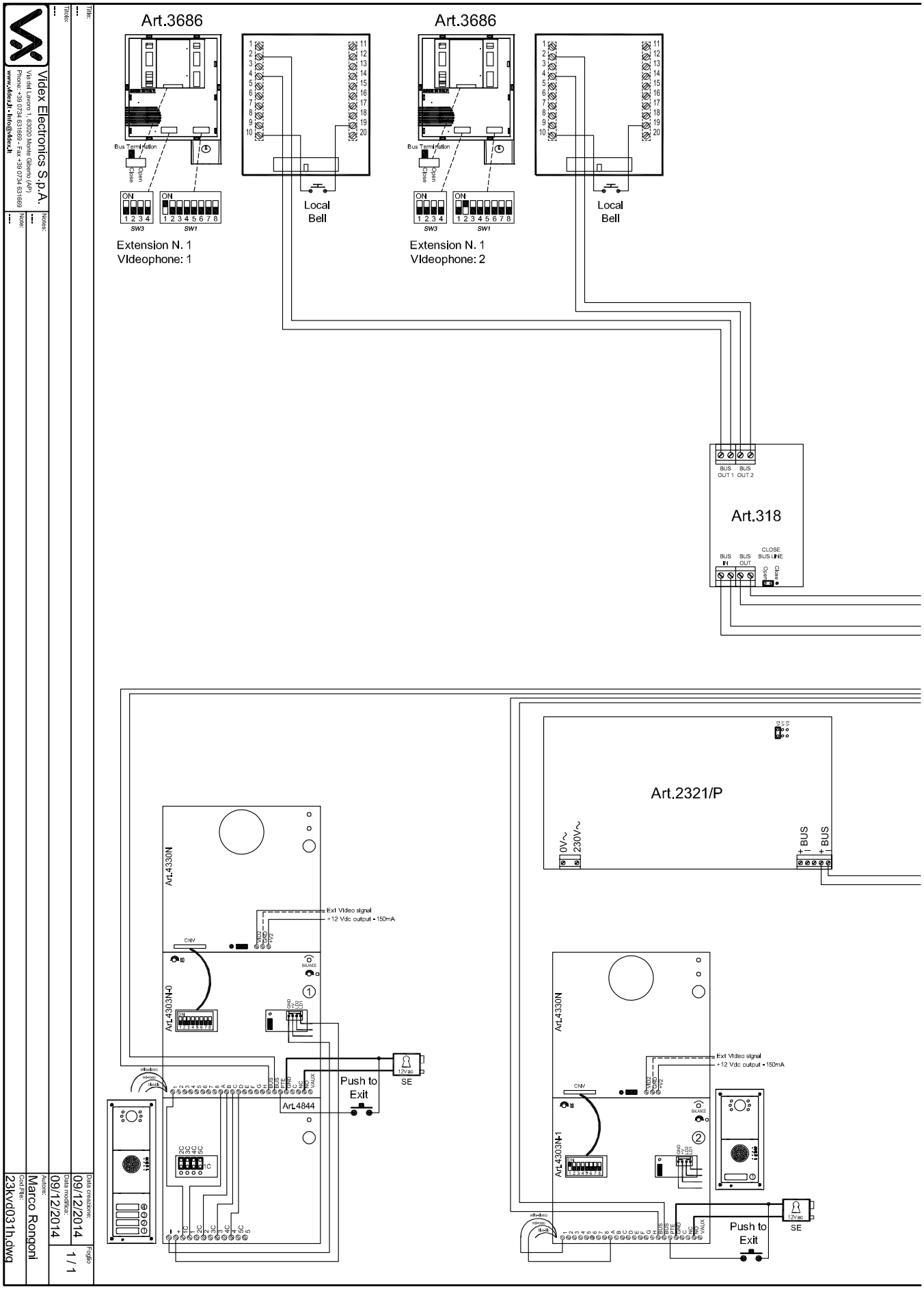

Videx Electronics S.p.A.
Via del Lavoro 1, 63020 Monte Giberto (AP)
Phone: +39 0734 631669 - Fax +39 0734 631669
www.videx.it - info@videx.it

Title:
Notes:
Note:
Author: Marco Rongoni
Cod.File: 23kvd0311h.dwg
Data creazione: 09/12/2014
Data modifica: 09/12/2014
Foglio 1 / 1

5 ENTRANCES, "4" USERS VIDEO DOOR ENTRY SYSTEM

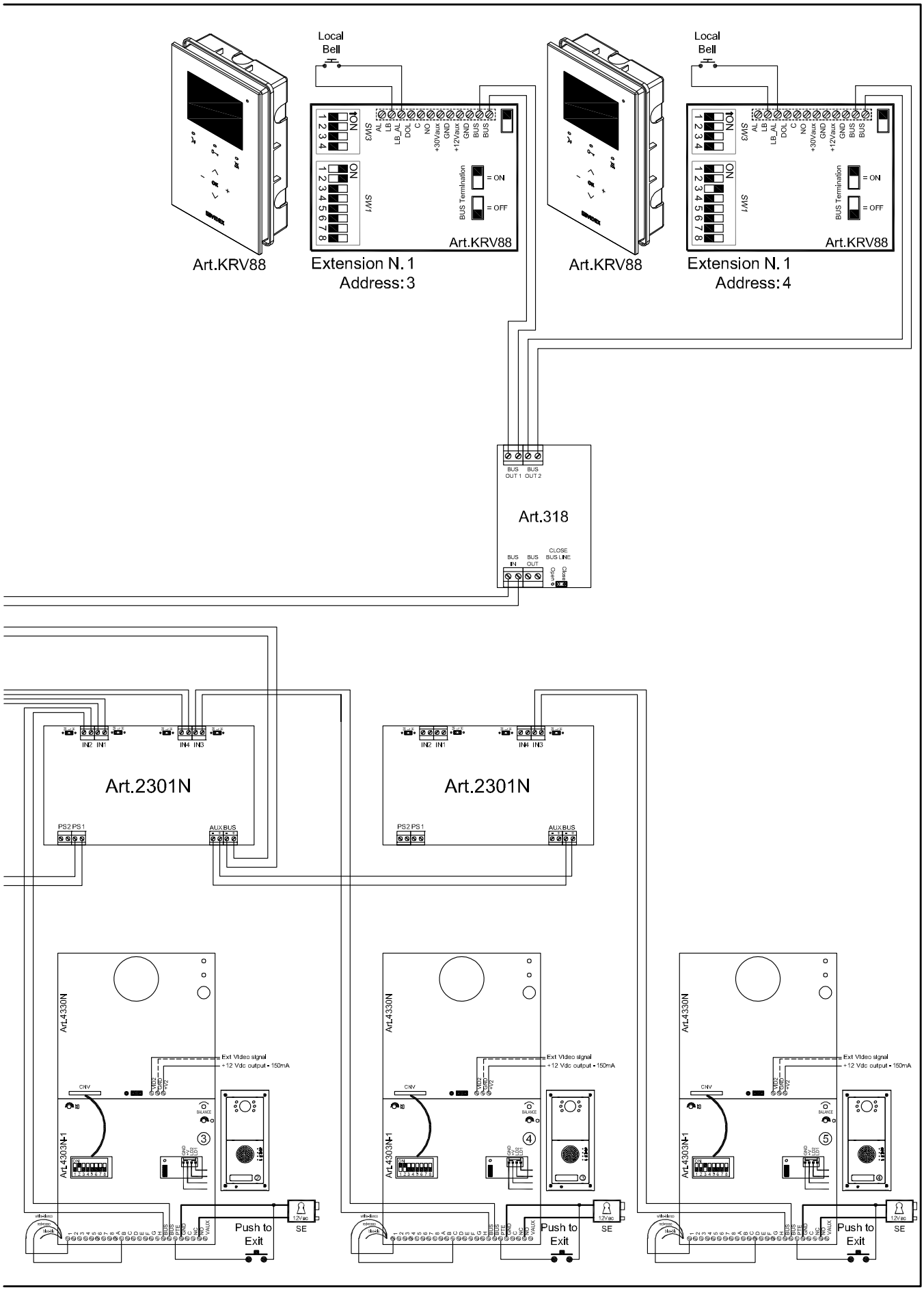

1 MAIN ENTRANCE 2 OR MORE SECONDARY ENTRANCES "N" USERS VIDEO DOOR ENTRY SYSTEM

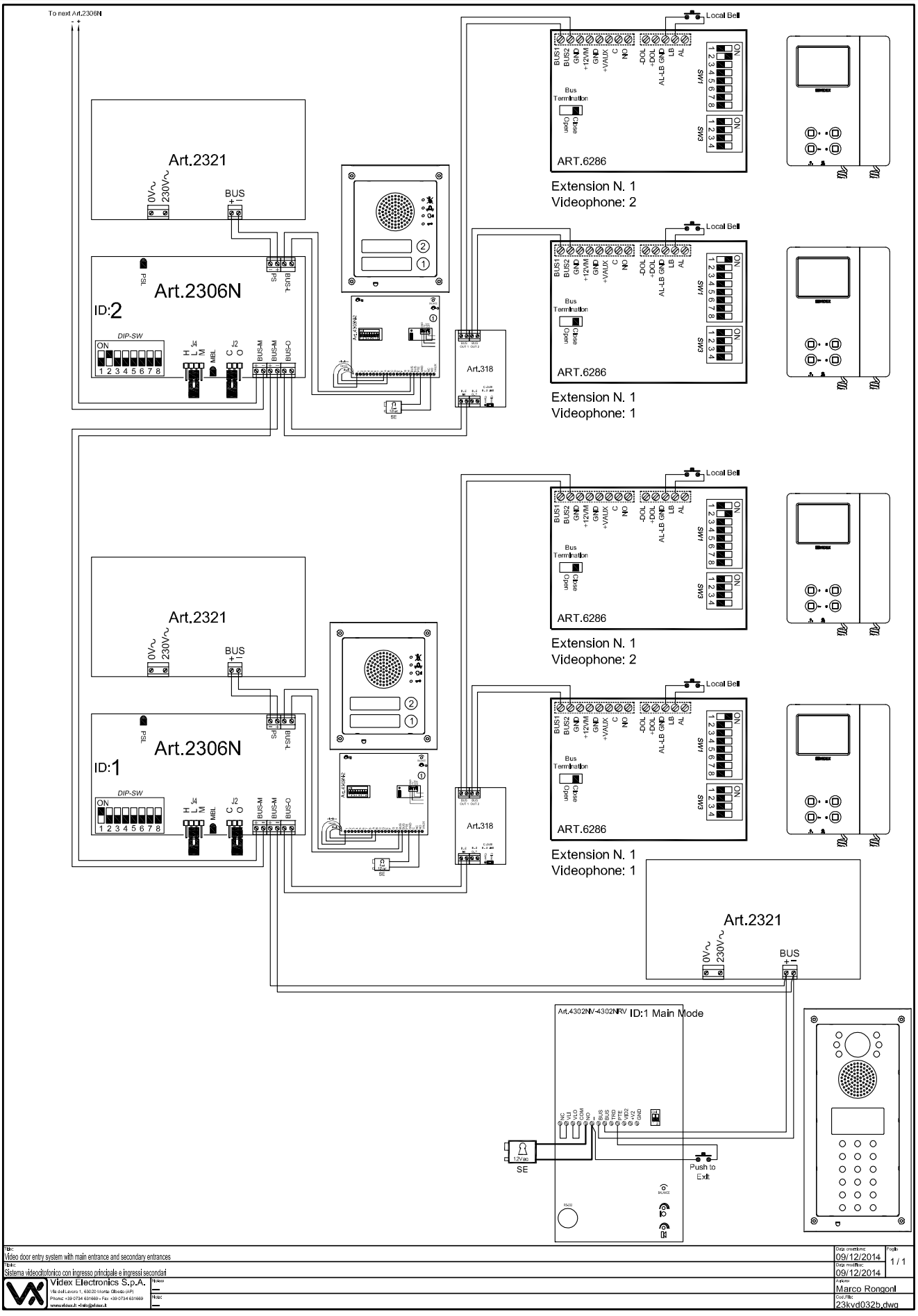

EXAMPLE INSTALLATION WITH INTERCOMS AND VIDEOPHONES OF DIFFERENT TYPE

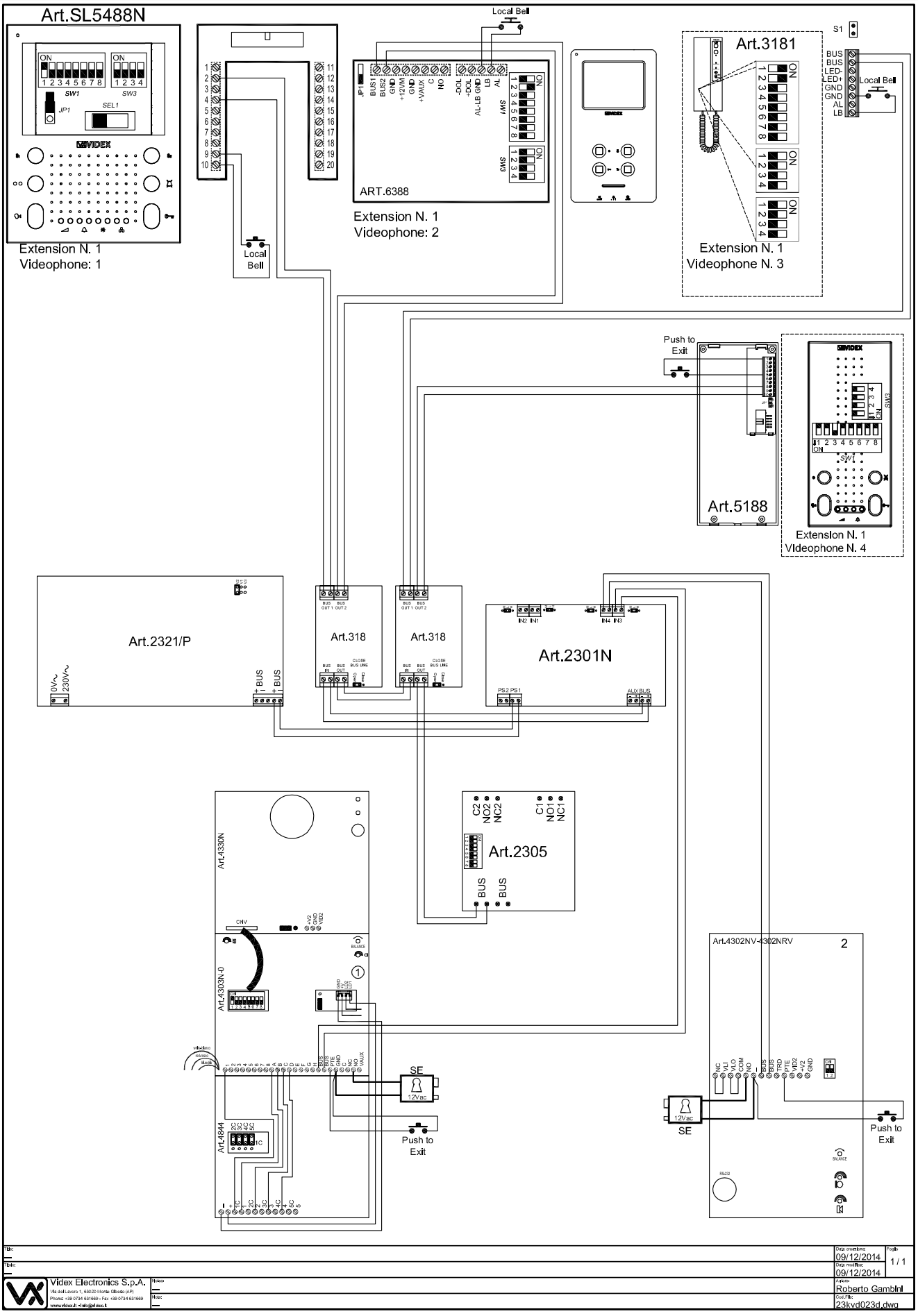

VIDEO DOOR ENTRY SYSTEM WITH CODELOCK ART. 4800 SUPPLIED BY THE ART. 2322

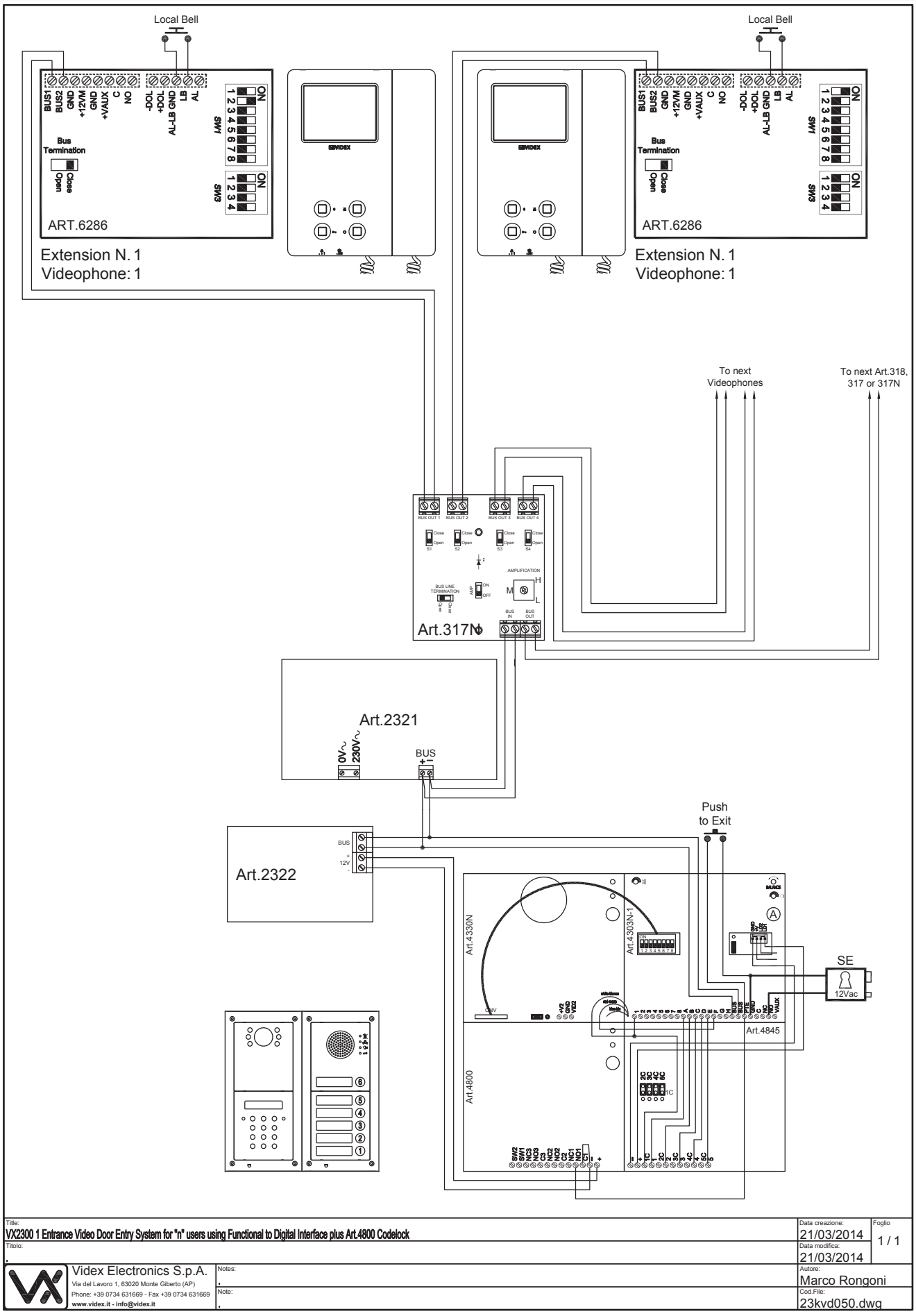

Title: VX2300 1 Entrance Video Door Entry System for "n" users using Functional to Digital Interface plus Art.4800 Codelock		Data creazione: 21/03/2014	Foglio 1 / 1
Titolo: .		Data modifica: 21/03/2014	
Videx Electronics S.p.A. Via del Lavoro 1, 63020 Monte Giberto (AP) Phone: +39 0734 631669 - Fax +39 0734 631669 www.videx.it - info@videx.it	Notes: . Note: .	Autore: Marco Rongoni	
		Cod.File: 23kvd050.dwg	

VIDEO DOOR ENTRY SYSTEM WITH KRISTALLO VIDEOPHONES AND FUNCTIONAL INTERFACE DOOR PANEL

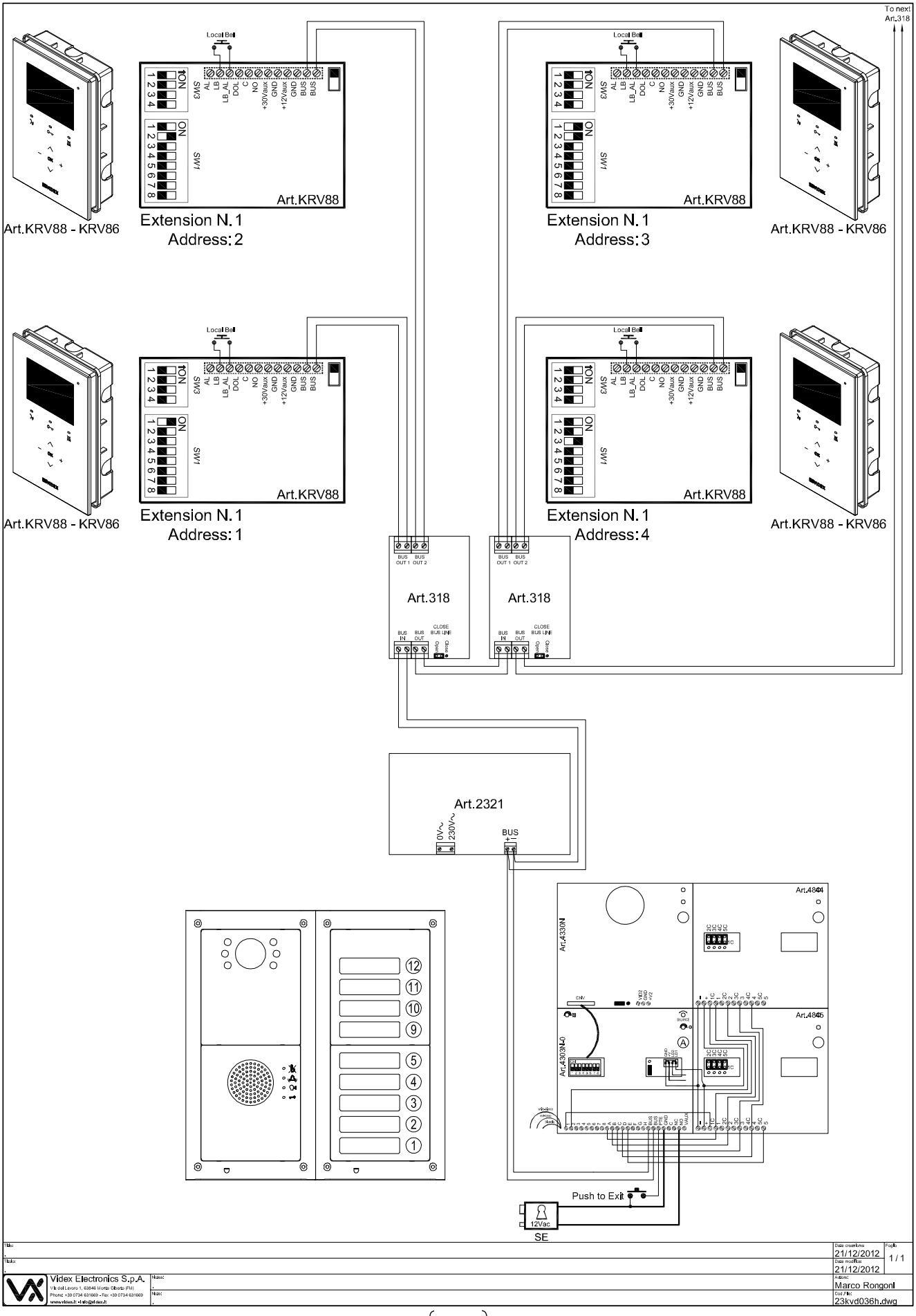

VIDEO DOOR ENTRY SYSTEM WITH KRISTALLO VIDEOPHONES AND DIGITAL PANEL

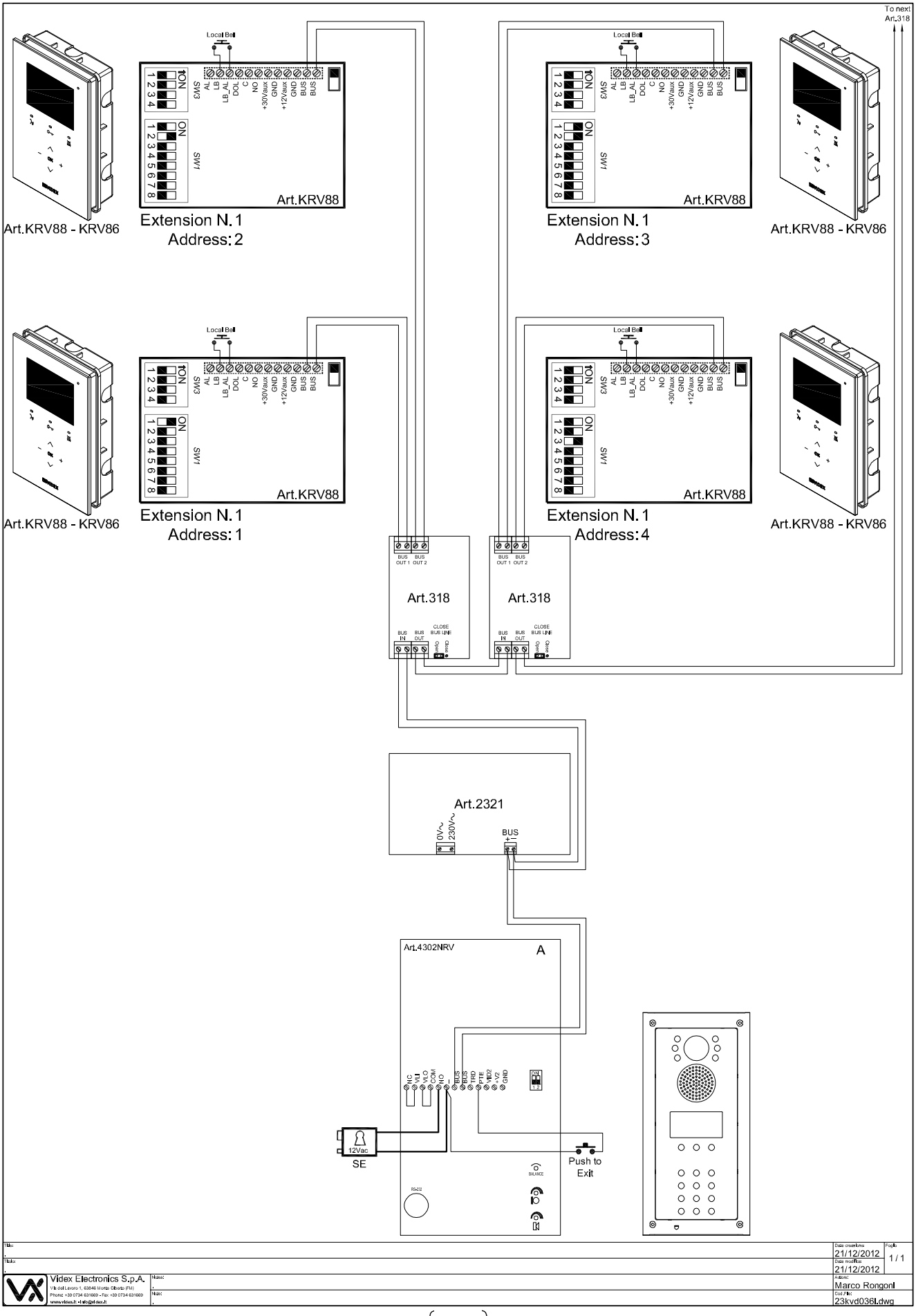

VIDEO DOOR ENTRY SYSTEM WITH 6400 VIDEOPHONES AND DIGITAL PANEL

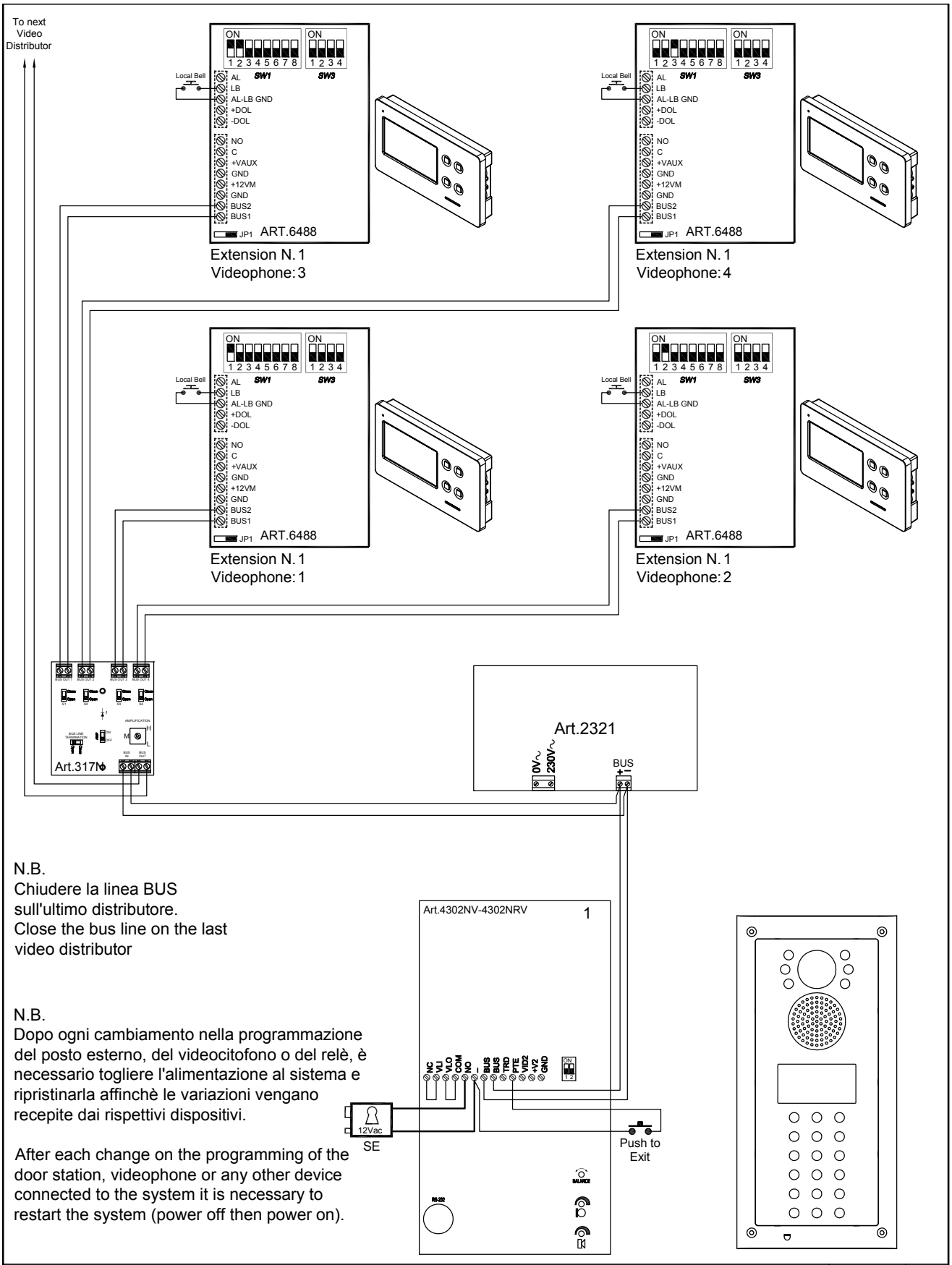

N.B.
Chiudere la linea BUS sull'ultimo distributore.
Close the bus line on the last video distributor

N.B.
Dopo ogni cambiamento nella programmazione del posto esterno, del videocitofono o del relè, è necessario togliere l'alimentazione al sistema e ripristinarla affinchè le variazioni vengano recepite dai rispettivi dispositivi.

After each change on the programming of the door station, videophone or any other device connected to the system it is necessary to restart the system (power off then power on).

Title: —		Data creazione: 15/07/2015	Foglio 1 / 1
Titolo: —		Data modifica: 16/07/2015	
Videx Electronics S.p.A. Via del Lavoro 1, 63020 Monte Giberto (AP) Phone: +39 0734 631669 - Fax +39 0734 631669 www.videx.it - info@videx.it	Notes: — Note: —	Autore: Marco Rongoni	
		Cod.File: 23kvd003d.dwg	

VIDEO DOOR ENTRY SYSTEM WITH 6400 VIDEOPHONES AND FUNCTIONAL INTERFACE DOOR PANEL

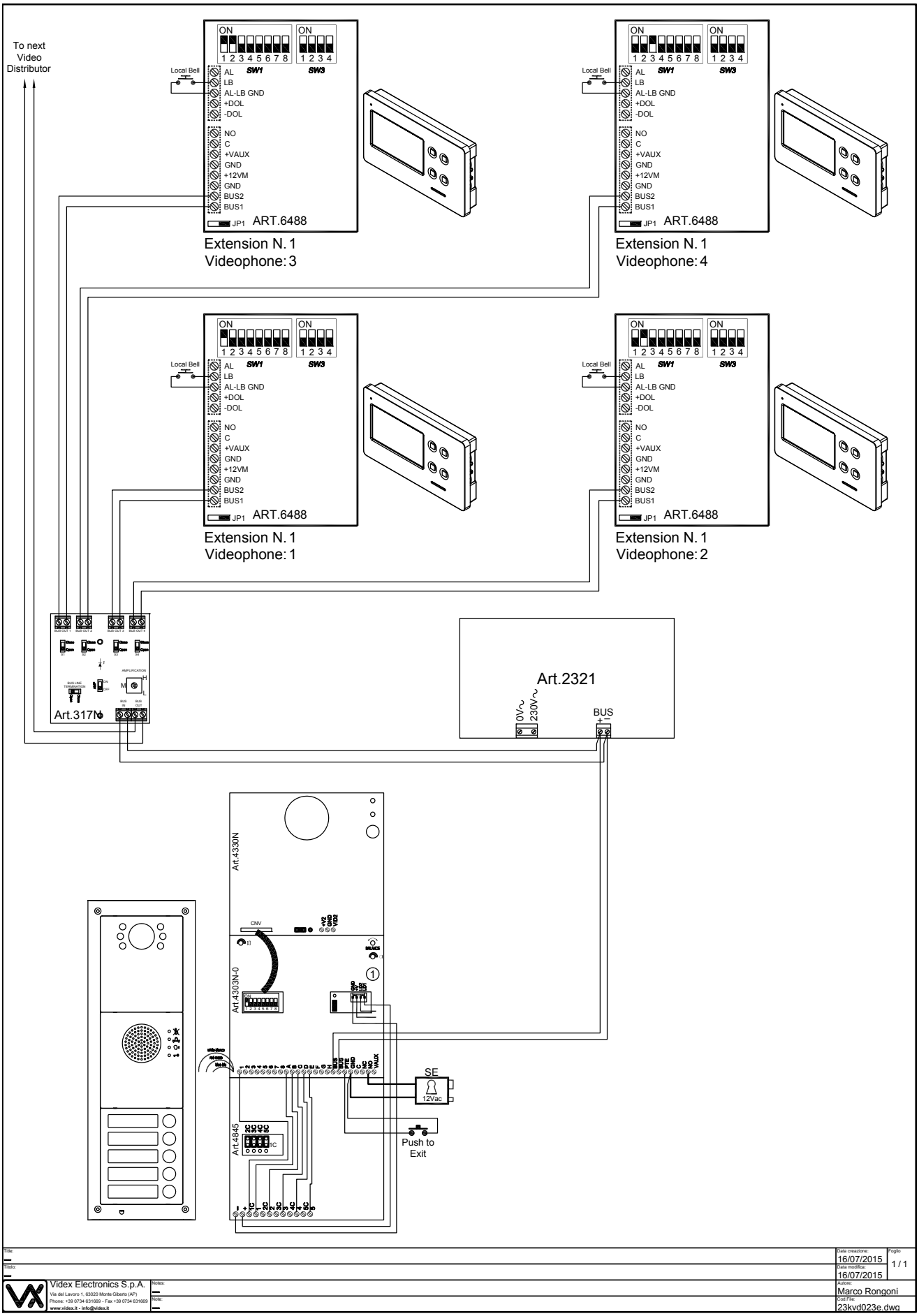

Title: —		Data creazione: 16/07/2015 — Foglio: 1 / 1
Titolo: —		Data modifica: 16/07/2015
Videx Electronics S.p.A. Via del Lavoro 1, 63020 Monte Giberto (AP) Phone: +39 0734 631669 - Fax +39 0734 631669 www.videx.it - info@videx.it	Notes: — Note: —	Autore: Marco Rongoni — Cod File: 23kvd023e.dwg

Notes

VIDEX®
TECHNOLOGY FOR THE FUTURE

Cert. N. IT05/1217

MADE IN ITALY

VIDEX ELECTRONICS S.P.A.
Via del Lavoro, 1 - 63846 Monte Giberto (FM) Italy
Tel (+39) 0734 631669 - Fax (+39) 0734 632475
www.videx.it - info@videx.it

AVD Security BV
Banterij 4 - 1046 AN Amsterdam
Tel (+31) 20 4972332-
www.avd.tv- info@avd.tv

CUSTOMER SUPPORT

All Countries:
VIDEX ELECTRONICS S.P.A.
www.videx.it - technical@videx.it
Tel: +39 0734-631669
Fax: +39 0734-632475

CE The product is CE marked demonstrating its conformity and is for distribution within all member states of the EU with no restrictions. This product follows the provisions of the European Directives 2004/108/ECC (EMC); 2006/95/ECC (LVD) and 93/68/ECC (CE marking).